Brookfield
Properties

Tenant Design Criteria Manual

Northbridge Place
105 Adelaide Street West

This manual is subject to change from time to time. It is critical to refer to the most current version hosted at axiistenantapp.com/available-space-northbridge-place/

This Manual is prepared to assist and introduce our Tenants, the Tenant's Consultants and Tenant's Contractors to the building standards used in the design and construction of office and retail premises in this Building. This standard will also set out the procedures, practices, rules, and regulations which will be applied to the Tenant's development of Tenant Work.

This Manual and the building Retail Design Criteria Manual are to be read in conjunction with and form part of the Lease. In the event of any conflict between this Manual, the Retail Design Criteria Manual and the Lease, the provisions of the Lease shall prevail.

The integrity of the buildings managed by Brookfield Properties together with all their systems and installations, are the result of meticulous care and planning. Therefore, any contemplated changes or alterations of existing designs and conditions must be completely compatible with the Building's operational or design specifications and/or established decor. It is imperative that any Tenant Leasehold Improvements - however small or limited in scope - be fully examined and approved by the Property Manager, before any implementation is permitted or undertaken.

Strict conformity to procedural guidelines for Tenant's Work as specified in the Lease is mandatory. Nevertheless, it must be clearly understood that in the event of any ambiguity of, or omission to the wording in this document, the approval authority to proceed or not to proceed with Tenant's Work will remain solely with the Property Manager in its capacity as a prudent and professional agent of the Landlord.

It will also be the Tenant's responsibility to ensure that a copy of this Manual and the Retail Design Criteria Manual (where applicable) is provided to the Tenant's Consultants and Tenant's Contractors and any person employed by them, and that the Tenant, the Tenant's Consultants and Tenant's Contractors and any person employed by them, adhere fully to the direction provided herein. Failure by the Tenant or the Tenant's Consultants and Tenant's Contractors, or any person employed by them, to comply with any of the general or specific guidelines because of a lack of understanding in, or awareness of, the Manuals will not be accepted by the Property Manager.

It is recommended that the Tenant and/or the Tenant's Consultants and Tenant's Contractors visit the site to inspect and verify all site conditions prior to the commencement of Tenant Work.

The Tenant is responsible for the production of accurate and complete working drawings for the proposed construction within the Leased Premises. Although the Landlord will supply the Tenant with Base Building Standard drawings if available, neither the Landlord nor the Property Manager shall be responsible for the same and the Tenant shall ensure that the Tenant's Consultants and Tenant's Contractors confirm the accuracy of the dimensions in such drawings prior to the performance of the Tenant Work.

The Landlord reserves the right, from time to time, to add or amend the information, procedures and regulations contained herein. Any such additions or amendments will apply to any Tenant's Work undertaken after the addition or amendment has been issued and shall be complied with by the Tenant at its expense.

TABLE OF CONTENTS

SECTION 1 – GENERAL INFORMATION 3

1.1 LANDLORD'S PROJECT MANAGEMENT 3
1.2 BASE BUILDING CONSTRUCTION 3
1.3 DEFINITIONS 3

SECTION 2 – TENANT'S DESIGN & WORKING DRAWINGS 6

2.1 TENANT'S CONSULTANTS 6
2.2 SUBMISSION & REVIEW OF DESIGN PLANS & SPECIFICATIONS 7
2.3 SUBMISSION OF PRELIMINARY DESIGN & SPECIFICATONS 8
2.4 APPROVAL OF PRELIMINARY DESIGN PLANS & SPECIFICATIONS 8
2.5 SUBMISSION OF FINAL PLANS & SPECIFICATIONS 8
2.6 APPROVAL OF FINAL PLANS & SPECIFICATIONS 11
2.7 REVIEW, APPROVAL AND COMMENTS 11

SECTION 3 – CONSTRUCTION PROCEDURES FOR TENANT WORK 12

3.1 TENANT'S REQUIREMENTS 12
3.2 TENANT'S CONTRACTORS REQUIREMENTS 14
3.3 COMMENCEMENT OF CONSTRUCTION 16
3.4 PROCEDURES DURING CONSTRUCTION 17
3.5 COMPLETION OF TENANT CONSTRUCTION 18

SECTION 4 – RULES & REGULATIONS 20

4.1 WORK PLACE & PUBLIC SAFETY 20
4.2 POLICING OF MEN, WORK PERMITS & SECURITY BADGES 21
4.3 EMERGENCY CONTACT 22
4.4 WORKING HOURS 22
4.5 SECURITY 22
4.6 MATERIAL DELIVERIES & HOISTING 22
4.7 PARKING & ACCESS 23
4.8 FLOOR LOADING 23
4.9 WORK AREAS 23
4.10 GARBAGE REMOVAL 23
4.11 TEMPORARY SERVICES 24
4.12 TEMPORARY FIRE PROTECTION 24
4.13 SPRAY FIREPROOFING 25
4.14 FIRE-STOPPING 25
4.15 TESTING & TIE-INS 25
4.16 ACCESS PANELS 26
4.17 LANDLORD'S ACCESS TO PREMISES 26
4.18 POWDER ACTUATED DEVICES 26
4.19 DRILLING OR CUTTING 26
4.19.1 POST-TENSIONED SLABS (Specific to 2 Bloor Street East property) 27
4.20 WELDING & ANY OPEN FLAME WORK 27
4.21 FIRE ALARMS/DEACTIVATION OF SMOKE ALARMS 28
4.22 FASTENING 28
4.23 DAILY CLEAN-UP 28
4.24 PRE-OCCUPANCY CLEANING 29
4.25 PROTECTION OF BASE BUILDING ELEMENTS 29
4.26 HAZARDOUS MATERIALS 30
4.27 ACCESS AND DELIVERIES 30
4.28 SYSTEM PROTECTION AND CLEANING 30
4.29 FLOOR COVERINGS 30
4.30 WORK CONFLICT 31
4.31 ROOF WORK/ACCESS 31

4.32 FINISH HARDWARE/LOCKSMITHING 31
4.33 AIR BALANCING 31
4.34 WATER BALANCING 32
4.35 AIR CONDITIONING UNITS 32
4.36 TENANT'S WORK TO BE PERFORMED BY THE LANDLORD'S APPROVED CONTRACTORS 33
4.37 GENERAL TENANT CONSTRUCTION GUIDELINES 34

SECTION 5 – LEED GUIDELINES 44

5.1 LEED GUIDELINES 44

SECTION 6 – BUILDING CHARGES & LANDLORD SERVICES 45

6.1 BUILDING CHARGES & LANDLORD SERVICES 45
6.2 INVOICING OF SERVICES 45
6.3 TERMS & CONDITIONS OF SERVICES 46

SECTION 7 –CONSULTANTS, CONTRACTORS & BUILDING INFORMATION 47

7.1 BUILDING INFORMATION 47
7.2 BASE BUILDING CONSULTANTS 49
7.3 APPROVED CONTRACTORS 50
7.4 LEGAL DESCRIPTION OF THE DEVELOPMENT LANDS 52
7.5 COST OF BASE BUILDING SERVICES 53
7.6 SAFE WORK PERMIT 54

SECTION 8 - BUILDING DESIGN PARAMETERS 55

8.1 OFFICE 55

SECTION 9 – TYPICAL STANDARD DETAILS 62

SECTION 10 – FORMS 83

SECTION 11 – MANUAL REVISIONS 89

SECTION 1 – GENERAL INFORMATION

1.1 LANDLORD'S PROJECT MANAGEMENT

The Property Manager has designated a Project Manager for each of retail premises and office premises whose primary function is:

- To provide guidance and assistance to Tenant throughout the design and construction of improvements within the Leased Premises.
- To review, comment upon and approve all Tenant submissions prior to commencement of Tenant's Work within the Leased Premises.
- To be the liaison between the Landlord and Tenant, and the Tenant's Consultants and Tenant's Contractors.
- All questions, comments and submissions relative to Tenant's Work are to be addressed to the applicable Project Manager identified in Section 7.1.

1.2 BASE BUILDING CONSTRUCTION

- Base Building Work includes all structural, mechanical and electrical systems as well as architectural finishes as stated in the basic construction contract between the Landlord and the Landlord's contractor for the construction of the Base Building Work for the Building.
- The Landlord shall provide one (1) set of base building or "as built" drawings if available. The drawings will contain dimensioned architectural, structural, mechanical and electrical floor plans, interior elevations and details (if any). It is clearly understood that the Landlord does not guarantee the accuracy of the information contained in such drawings and the Tenant shall ensure that the Tenant's Contractors confirm the accuracy of the dimensions in such drawings prior to the performance of the Tenant Work.
- Any alterations and/or additions to the base building construction that may be required to accommodate the Tenant's plans and specifications shall be subject to the approval of the Landlord and shall then be carried out by the Tenant using the Landlord's contractor, under the supervision of the Base Building Consultants as retained by the Tenant, at the Tenant's expense. The cost of such work which shall be paid by the Tenant shall include, but not be limited to, labour, materials, applicable taxes, all architectural, engineering and contractor fees, as well as the Landlord's fees for coordination and other costs and fees in accordance with the Section 6.1 in this Manual "Building Charges and Landlord's Services".

1.3 DEFINITIONS

Capitalized terms in this Manual shall be defined as follows:

(a) "Addenda" means revisions to the final issued for construction documents.

(b) "Applicable Laws" means applicable by-laws, codes, standards, regulations, laws, statutes, rules or ordinances including, without limitation, the current versions of the Ontario Fire Code, *Building Code Act* and the *Occupational Health and Safety Act*.

(c) "Approved Contractors" means the contractors identified in Section 7.3 and Approved Contractor means any one of them.

(d) "Approved Drawings" has the meaning set out in Section 2.2.

(e) "Authorities" means authorities having jurisdiction at the location of the Building (including, without limitation, authorities relating to Applicable Laws) and Authority means any one of them.

(e.1) "Building Access Form" means a form as per Section 10 - Forms.

(e.2) "Base Building Standard" means the then current basic standards established from time to time by the Landlord applicable to the Building, its systems and/or Tenant's Work.

(f) "Base Building Work" means the base building work for the Building as described in this Manual.

(g) "Base Building Consultants" means the consultants identified in Section 7.2 and Base Building Consultant means any one of them.

(h) "Building" means the building situated on the development lands described in Section 7.4 and in which the Leased Premises are located.

(i) "Building Operations and Security Centre" means the operations and security centre for the Building.

(i.1) "Construction Deposit" means the security deposit to be submitted by the Tenant or by the Tenant's Contractor, prior to the commencement of construction, to be held in a non-interest bearing account until such time as the required closeout documents are received to the satisfaction of the Landlord.

(j) "Design Process" means the development and completion of the design for the Tenant Work.

(j.1) "Designated Substance Report" means the report outlining all existing designated substances and hazardous materials as required by the *Occupational Health and Safety Act*, and Workplace Safety and Insurance Board or their respective successors, and shall include an inventory of designated substances identified on the property, including their location, condition and estimated quantities.

(k) "Fixturing Period" means the period, if any, as set out in the Lease.

(l) Intentionally Deleted.

(m) Intentionally Deleted.

(n) "Landlord" means the entity identified in Section 7.1.

(o) "Lease" means the Offer to Lease unless superseded by the Lease and all ancillary lease documentation executed between the Landlord and the Tenant, including without limitation any work letter, as may be amended from time to time in writing between the Landlord and Tenant.

(p) "Leased Premises", "Premises" or "Tenant's Premises" is as defined in the Lease.

(q) Intentionally deleted.

(r) "Manual" means this Tenant Design & Construction Manual.

(s) "Normal Business Hours" means (i) between 7:30 a.m. and 6:30 p.m. from Monday to Friday (inclusive) and (ii) between 9:00 a.m. and 5:00 p.m. on Saturday, but excluding Sundays and statutory holidays in Ontario.

(t) "Notice of Project" means a form to be submitted to the Ministry of Labour by the project constructor before starting a project costing $50,000 or more.

(t.1) "*Occupational Health and Safety Act*" R.S.O. 1990, c.O.1 as same is amended and/or replaced from time to time.

(u) "Offer to Lease" means the Offer to Lease executed between the Landlord and the Tenant.

(v) "Open for Business" means the first day the Tenant begins the conduct of business in any part of the Premises.

(w) "Project Manager" is as set out in Section 7.1.

(w.1) "Property Manager" means the entity identified in Section 7.1.

(w.2) "Retail Design Criteria Manual" the manual prescribed from time to time for the retail portion of the Building relating to the scope of design and aesthetics applicable to the Tenant's Work.

(x) "Security Console Desk" means the security console desk for the Building located in the front lobby of the Building.

(y) "Site" means the site of the Building.

(z) "Substantial Completion" is as defined in the *Construction Lien Act*, R.S.O. 1990, Chapter C.30, as it may be amended from time to time.

(aa) Intentionally Deleted.

(bb) "Tenant" means the occupant and Tenant under the Lease.

(bb.1) "Tenant Services Coordinator" is the Property Manager's representative responsible for providing coordination and support services to tenants of the Building.

(cc) "Tenant's Work" or "Tenant Leasehold Improvements" includes, without limitation, the work set out in Section 3 – Construction Procedures for Tenant Work and any other work performed for the Tenant.

(dd) "Tenant's Consultants" or "Tenant's Consultant" means the architects, engineers and other consultants, directly or indirectly, retained by the Tenant in connection with the Tenant's Work who shall be licensed or otherwise authorized to practice in Ontario.

(ee) "Tenant's Contractors" or "Tenant's Contractor" means the contractors and suppliers, directly or indirectly, retained by the Tenant in connection with the Tenant's Work including, without limitation, sub-contractors.

(ff) "Working Day" means a day other than a Saturday, Sunday or statutory holiday in Ontario.

SECTION 2 – TENANT'S DESIGN & WORKING DRAWINGS

This section applies to **OFFICE** only. For retail including food court, refer to separate Retail Tenant Design Criteria Manual.

2.1 TENANT'S CONSULTANTS

- The Tenant shall engage the Tenant's Consultants to prepare dimensioned construction drawings and specifications that are necessary for the construction of the Tenant Leasehold Improvements. The approval by the Landlord of the Tenant's Consultants, shall be obtained by the Tenant prior to the Tenant engaging any of its consultants.

- The Tenant may wish to retain the Base Building Consultants under direct contractual arrangement for the production of working drawings. If the Tenant chooses to employ consultants other than the Base Building Consultants for its design work, the Project Manager will have such drawings checked and the construction inspected by the Base Building Consultants in order to ensure compatibility with the Building's systems. The cost of such work by the Base Building Consultants will be charged to and paid by the Tenant. Rates for such reviews are available upon request directly from the Base Building Consultants, prior to the commencement of the Design Process. A list of Base Building Consultants is included in Section 7.2 of this Manual.

- All drawings, including but not limited to space plans, architectural, structural, mechanical and electrical drawings, must be approved by the Landlord, in writing, prior to the commencement of any Tenant Work.

- The Landlord, from time to time, may require the Tenant to produce additional or more detailed drawings or information which, in the Landlord's opinion, may be necessary to identify and describe the nature of the intended improvements.

- The Tenant shall ensure the Tenant's Consultants visit the Site to verify the actual site conditions prior to the commencement of the Tenant's Work.

- By giving approval to the Tenant's plans, the Landlord and its consultants do not waive the Tenant's responsibility to ensure that any and all Tenant Leasehold Improvements meet the requirements of the Lease, this Manual and Applicable Laws. The Tenant and the Tenant's Consultants shall inform themselves regarding the requirements of the Applicable Laws, as well as this Manual, before starting the Design Process.

- The Tenant's Consultants shall, prior to the commencement of design development, furnish evidence to the Property Manager identifying they are adequately and properly covered by insurance, and such insurance shall be continuously maintained during the entire period of construction, according to the following coverage and terms:

  (i) Commercial General Liability insurance with a minimum limit of $2,500,000.00 per occurrence covering all liability for injuries to and death of a person or persons and for damage to property of others which may arise from the operations of the Tenant's Consultants and which includes coverage for bodily injury and property damage, products and completed operations, blanket contractual liability, personal injury liability, non-owned automobile liability, owner's and contractor's protective insurance and cross liability and severability of interest and breach of conditions clauses, and, where applicable, sudden and accidental pollution liability and confirmation that the policy does not contain X,C,U explosion, collapse or underground exclusions;

(ii) "All risk" builders risk property insurance insuring the Tenant's Work covering the total contract price for the Tenant's Work and shall include a waiver of subrogation rights against the Landlord and Property Manager;

(iii) "All risk" property insurance covering the Tenant's Consultants' owned, rented or leased tools, equipment and property and shall include a waiver of subrogation rights against the Landlord and Property Manager

(iv) Automobile insurance covering all owned, rented and leased vehicles, with a minimum $2,000,000.00 combined single limit of liability for bodily injury and property damage;

(v) Workers compensation satisfying to the Statutory requirements in the province of the Tenant's Work;

(vi) Professional liability (errors and omissions) insurance with a minimum limit of $3,000,000 per occurrence and annual aggregate, providing coverage for the Tenant's Consultant's interest in joint ventures (if applicable), punitive damages coverage (where not prohibited by law), limited contractual liability, retroactive date prior to start of services, extended reporting period of at least 36 months, and no pollution exclusion;

(vii) The Landlord and Property Manager and while on site, all Tenant's Consultants and subconsultants and trades of those insured, engaged in or connected with the design of the Premises and Tenant's Work are listed as additional insured's on the commercial general liability policies identified under (i) above and Landlord and Property Manager are identified as a loss payee under (ii) above;

(viii) All policies of insurance relating to Tenant's Work must be in amounts and in form and with insurers acceptable to the Landlord, including an undertaking by the insurers to give at least (30) days' written notice of cancellation or material changes to the policy holder and the Landlord;

(ix) All insurance provided by the Tenant's Consultants above shall be primary and non-contributory to any insurance available to the Landlord or Property Manager;

(x) The Tenant's Consultants shall be liable for all injuries to persons and for damage to property caused by its operations and those of its employees engaged in its operations in connection with the Tenant's Work. The Tenant's Consultant shall indemnify and save harmless the Landlord and the Property Manager and their respective employees, from all suits and actions for damages and costs to which the Landlord and/or the Property Manager may be put by reason of injury or death to persons and damage to property of the Landlord and/or the Property Manager and others whatsoever, in the performance of the work. Prior to commencement, the Tenant's Consultants will provide the Property Manager with written evidence of such indemnity; and

(xi) The Tenant's Consultants will cause each of its subconsultants to purchase and maintain insurance of the types and in the amounts specified above, except for (ii) above, and include Landlord and Property Manager and Tenant's Consultants as additional insured under their commercial general liability insurance.

2.2 SUBMISSION & REVIEW OF DESIGN PLANS & SPECIFICATIONS

- The drawings will be reviewed by the Landlord for compatibility with the overall project; comments and/or approval will be marked on one (1) set of drawings or in a letter addressed to the Tenant or its designated representative. Such comments must be distributed to the Tenant's Consultants by the Tenant.

- Plans shall show Building grid lines, scale, the Tenant's Consultant's Building Code Identification Number, designer's name and address, engineer's name, address and stamp, date of issue and revision number.

- For the purpose of this Manual, the drawings approved by the Landlord shall be called "Approved Drawings". Any revisions made to the Approved Drawings by the Tenant and/or agents must be submitted to the Landlord for further approval.

- The Landlord reserves the right to alter any section of this Manual without notice, which may necessitate a further submission by the Tenant, at the expense of the Tenant.

- A set of prints of the Approved Drawings must be kept on the Leased Premises for the duration of the construction period and be available to the Project Manager upon request.

2.3 SUBMISSION OF PRELIMINARY DESIGN & SPECIFICATONS

The Tenant will provide the Landlord with two (2) printed sets and one (1) electronic (PDF) set of preliminary design plans and specifications for all of the Tenant's Work. These shall demonstrate design intent and shall be subject to the approval of the Landlord in writing prior to the Tenant's preparation of final plans and specifications.

Preliminary drawings shall include the following information as a minimum (additional information is encouraged):

- Key Plan showing the location of the Tenant's Premises;
- Preliminary Floor Plans (1:100) indicating interior design (Indicate all materials and finishes);
- Reflected Ceiling Plans (1:100) indicating ceiling materials, ceiling heights, the location, and type of all light fixtures, sprinklers, life safety/music speakers, air grilles, exit lights and signage;
- Samples and colour chips of all finishes visible in the common areas should be firmly applied to illustration boards (maximum size 8 ½" x 14") and shall be clearly labeled and counter-referenced on the drawings.

2.4 APPROVAL OF PRELIMINARY DESIGN PLANS & SPECIFICATIONS

Within ten (10) Working Days (or such longer period as reasonably required by the Landlord having regard to the size and scope of the Tenant's Work, but in any event no longer than thirty (30) calendar days) after receipt of the design plans and specifications, the Landlord shall notify its written approval thereof or indicate any changes required, in which case the Tenant shall resubmit for written approval amended plans and specifications within a further ten (10) Working Days. Prior to resubmission the Tenant will, if necessary, discuss any required changes with the Project Manager.

2.5 SUBMISSION OF FINAL PLANS & SPECIFICATIONS

At least thirty (30) days prior to the commencement of the Fixturing Period, the Tenant shall submit three (3) printed sets and an electronic set of final "Issued for Construction" plans and specifications, or if the Landlord's Base Building Consultants were used, the Tenant shall submit two (2) printed sets and an electronic set of final "Issued for Construction" plans and specifications and such other information as may be necessary for the Landlord's Base Building Work in the Premises to proceed, where applicable, and the Tenant's Work to be approved. Electrical, mechanical, and structural drawings must be signed and sealed by the Tenant's Consultant responsible for the design.

Each set of final plans and specifications shall be in metric/imperial and be of uniform size not exceeding 850 mm x 1220 mm (36" x 44", "E" size) to a minimum scale of 1:100 and shall include, but not be limited to, the following:

a. Architectural Submission

Three (3) sets of drawings, or if the Landlord's Base Building Consultants were used, two (2) sets of drawings, and a sample board of finishes visible from the common areas if applicable. The Tenant must include the following:

(i) Key Plan
- Where the Leased Premises occupy less than a full floor, plans must be included of the entire floor showing the location (complete with dimensions) of the Leased Premises and their relationship to the elevator lobby, exit stairs, washrooms, fire hose cabinets, etc.

(ii) Floor Plans (scale 1:100 minimum)
- Location of all major fixed elements within the Leased Premises dimensionally related to grid lines and demising partitions;
- Furniture plan with room designation and uses;
- Location, loads and layouts of rooms of unusual loading concentration such as centralized filing areas, libraries, vaults, etc. (subject to the approval of the Landlord's structural engineer);
- Materials and finishes throughout the Leased Premises;
- The number of people to occupy the Leased Premises including all heat load calculations for the determination of HVAC requirements;
- Telephone and power outlet plan dimensioned; and
- Location of inter-floor stairs if any (subject to the approval of the Landlord's structural engineer).

(iii) Reflected Ceiling/lighting Plan (scale 1:100 minimum)
- Lighting layout;
- Partition layout;
- Location of any sound baffles above the ceiling;
- The locations of any access panels required to service Building systems;
- Various heights;
- Location of proposed special light fixtures, their manufacturer's name and catalogue cut sheets, lamps to be used and mounting details (recessed, surface, etc);
- General pattern, grilles, diffusers, air transfer ducts, speakers, sprinkler heads, coves and recesses; and
- Specify ceiling material by name, thickness and colour, as well as fire rating if required by Applicable Laws.

(iv) Sections and Details
- At a suitable scale to indicate/partition details, baffles, doors, millwork, and other similar details.

(v) Room Finish, Door and Hardware Schedules
- All elements including the keying which must be to a Base Building Standard.

b. Mechanical Submission (stamped by Engineer)

Three (3) sets of drawings or if the Landlord's Base Building Consultants were used, two (2) sets of drawings (Scale 1:100 minimum)

The Tenant will be required to retain the services of a professional engineer for the preparation of its mechanical plans. The Tenant will be encouraged to employ the services of the Base Building Consultant. Drawings are to show all alterations and/or additions to the existing Base Building Work, as well as those that remain unchanged.

(i) H.V.A.C. Layout
Ceiling plan complete with detailed ductwork layout, showing all duct sizes; location of A/C units or fan-powered-boxes, dampers, grilles, diffusers, transfer-ducts, thermostats, access doors and other equipment if required; heating load calculations, air quantities required at each diffuser and additional information if applicable.

(ii) Plumbing Layout
Floor plan indicating piping runs for drains, vents and water supply and the location of valves, clean-outs, grease traps, back-flow preventers, and other special or specific requirements. Indicate location of water meter and location of hot water tank if applicable.

(iii) Sprinkler layout
A dimensioned layout of the sprinkler piping and size indicating all sprinkler heads new and relocated. Sprinkler layout is to include calculations where more than five (5) heads are added to the system. A dimensioned layout of new or relocated fire hose cabinets with PRV setting and data.

c. Electrical Submission (stamped by Engineer)

The Tenant will be required to retain the services of a professional engineer for the preparation of their electrical plans. The Tenant will be encouraged to employ the services of the Base Building Consultant.

Drawings are to show all alterations and/or additions to the existing Base Building Work, as well as those which remain unchanged.

(i) Electrical Plan – three (3) sets of drawings, or if the Landlord's Base Building Consultants were used, two (2) set of drawings (scale 1:100 minimum).
Locate light fixtures, including night, emergency and exit light fixtures. Specify size, wattage, type and mounting. Locate all life safety devices including speakers, pull stations, smoke detectors and heat detectors. Wiring diagram showing circuitry of all electrical elements within the Tenant area and Premises. Provide electrical load summary separating lighting, power, and disproportionate/high use loads. Tie-ins and extensions to Base Building Standard security, fire alarm and communication systems must be also clearly shown.

(ii) All electrical loads shall be metered in conjunction with Base Building Standards.

d. Structural Submission (stamped by Engineer)

Structural drawings must be submitted only when modifications to the structure are anticipated. These must be created by the Landlord's Base Building Consultant structural engineer. Tenant will be back-charged for engineering services that require investigation of loads above and beyond the Tenant's acceptable loads. The structural modifications shall be performed by the Tenant using the Landlord's contractor at the Tenant's expense.

e. Specifications

Specifications must be submitted with the working drawings describing the quality and performance standards for all of the Tenant's Work in "CSC (Construction Specifications Canada), 3 part format, Master Format numbering system."

2.6 APPROVAL OF FINAL PLANS & SPECIFICATIONS

Within ten (10) Working Days (or such longer period as reasonably required by the Landlord having regard to the size and scope of the Tenant's Work, but in any event no longer than thirty (30) calendar days) after receipt by the Landlord of the Tenant's final plans and specifications, the Landlord shall provide its approval and/or comments in a letter including all comments made by its consultants. The Tenant shall revise its drawings to include all the comments and corrections and provide the Landlord with a revised set of prints "issued for construction" prior to commencing the Tenant's Work. The Landlord shall not be obligated to change or extend any of the dates contained in the Lease as a result of the drawings being rejected by the Landlord or its consultants.

Subject to Section 2.7, the Landlord's approval of the Tenant's plans and specifications shall relate only to general compliance with the Landlord's rules, regulations, and specifications and shall not extend to, and shall not be deemed to signify compliance with the Lease, Applicable Laws, building codes or with life safety or emergency requirements of competent public Authorities. The Landlord accepts no liability for claims against the Tenant in respect to any of these matters.

2.7 REVIEW, APPROVAL AND COMMENTS

The Tenant shall not be relieved of its obligations and responsibilities under the Lease or this Manual notwithstanding the following:

(a) the Property Manager's or Landlord's consultant's or contractor's receipt, inspection, review, approval or acceptance of the Tenant's Work or any document provided by or on behalf of the Tenant;

(b) the failure of the Property Manager or Landlord's consultant or contractor to provide comments or their provision of comments;

(c) the Landlord's approval, or designation, of a consultant or contractor in connection with the Lease or this Manual or any other assistance or guidance provided by the Property Manager; or

(d) any other provision in this Manual.

SECTION 3 – CONSTRUCTION PROCEDURES FOR TENANT WORK

3.1 TENANT'S REQUIREMENTS

The Tenant, at its expense, is responsible for the following:

(a) Execution of the Tenant's Lease for the Premises

(b) Insurance
The Tenant must provide, to the Landlord, evidence of insurance coverage for (a) Tenant's insurance as required in the Lease, (b) Tenant's Contractors' insurance as outlined in this document (as may be amended from time to time by the Landlord), prior to the undertaking of any construction in the Leased Premises and/or any other areas requiring access within the Building and (c) Tenant's Consultants insurance as outlined in this document (as may be amended from time to time by the Landlord), prior to commencement of the design development. Insurance coverage shall be at least the minimum stated in the Lease (with respect to Tenant's insurance) and in this document (with respect to the Tenant's Contractors and Tenant's Consultants), and the Landlord and Property Manager shall be named as additional insured and/or loss payees, as applicable.

(c) Obtain written approval from the Landlord for final "issued for construction" documents.

(d) Permits
The Tenant is responsible for obtaining all necessary permits and approvals, from the Building Department, Health Department, Fire Marshall, the Ministry of Labour and any other Authority. The Tenant shall submit copies of the building permit and any other required permits or approvals to the Project Manager, prior to the commencement of the Tenant's construction. The Tenant shall forward all comments from the Authority to the Project Manager for its review.

Upon receipt of the building permit, the Tenant shall forward one (1) copy of the building permit and the permit drawings bearing the city's stamp and review comments to the Project Manager.

It is the Tenant's responsibility to have the Premises inspected by the appropriate government building, hydro, plumbing and HVAC inspectors, to ensure that the applications are closed and provide evidence of permit closure at project completion to the Project Manager.

(e) Lien Protection
If a lien arising from the Tenant's Work is registered against the Site or given to the Landlord, the applicable provisions of the Lease shall apply to such liens.

(f) Provide a Construction Deposit based on the value of construction, to be paid to the Property Manager; being three percent (3%) of the value of the construction (minimum $5,000 and maximum $10,000) (or the amount otherwise set out in the Lease which takes precedence) will be held in a non-interest banking account. The Construction Deposit will be refundable upon receipt of all close-out documentation. If close-out documents are not received within sixty (60) days of Substantial Completion of the Tenant's Work, the Construction Deposit shall be forfeited. The Landlord may in its sole discretion apply such funds (but does not have the obligation to) against necessary actions in obtaining the close-out documents itself.

Certified cheques or money orders are acceptable.

(g) The fulfilment of the obligations and responsibilities of the Tenant's Contractors set out in this Manual.

(h) Designated Substance Surveys and Reports.

Where available, the Landlord shall provide to the Tenant copy of the most recent Designated Substance Report.

The Tenant shall ensure prior to starting any significant demolition or construction within their Premises, that they provide to the Tenant's Contractor a Designated Substance Report, as required by Section 30.1 of the *Occupational Health & Safety Act*, R.S.O. 1990, c. 1.0, Such report shall be provided by the Tenant's Consultants.

The following 11 substances are among those designated by the *Occupational Health and Safety Act* as toxic. These are:

- Acrylonitrile
- Arsenic
- Asbestos
- Benzene
- Core Oven Emissions
- Ethylene Oxide
- Isocyanates
- Lead
- Mercury
- Silica
- Vinyl Chloride

(i) Mould Surveys and Reports.

If the Tenant:

(i) during fixturing of its Premises, or
(ii) during a renovation during the term of the Lease or upon an extension/renewal of its Lease, or
(iii) at any time in its term of the Lease,

discovers "mould", the procedure to follow shall be as follows:

1. Promptly notify the Landlord/Property Manager of the mould in the Building;
2. Tenant must notify its Premises insurer promptly;
3. Landlord will obtain a mould report at the Tenant's cost from the Landlord approved certified consultant;
4. Tenant must meet with the Landlord to review the mould report and where required, agree on a course of action for remediation and abatement in the Premises, including timelines, at the Tenant's cost. Tenant must use a Landlord approved certified consultant in mould abatement and remediation actions.
5. If Tenant fails to start or diligently proceed with remediation, then the Landlord will retain a contractor at the Tenant's cost plus an administration fee of fifteen percent (15%) thereon, chargeable as Rent under the Lease;
6. Tenant must remediate and abate mould in its Premises;
7. Landlord will monitor the Tenant's progress of the agreed to course of action between the parties for remediation/abatement required in the Premises.
8. Tenant must direct the Tenant's contractor to address to the Landlord written confirmation that the mould has been remediated and/or abated from the Premises in accordance with all Applicable Laws of the province where the Building is located.

3.2 TENANT'S CONTRACTORS REQUIREMENTS

The Tenant is required to engage the Tenant's Contractors for the purpose of carrying out Tenant Leasehold Improvement. The Tenant shall ensure that all Tenant's Contractors comply with the following:

(a) The Tenant's Contractors shall, prior to commencement of construction furnish evidence to the Property Manager identifying they are adequately and properly covered by insurance, and such insurance shall be continuously maintained during the entire period of construction, according to the following coverage and terms:

(i) Commercial General Liability insurance with a minimum limit of $5,000,000.00 per occurrence covering all liability for injuries to and death of a person or persons and for damage to property of others which may arise from the operations of the Tenant's Contractors and which includes coverage for bodily injury and property damage, products and completed operations, blanket contractual liability, personal injury liability, non-owned automobile liability, owner's and contractor's protective insurance and cross liability and severability of interest and breach of conditions clauses, and, where applicable, sudden and accidental pollution liability and confirmation that the policy does not contain X,C,U explosion, collapse or underground exclusions;

(ii) "All risk" builders risk property insurance insuring the Tenant's Work covering the total contract price for the Tenant's Work and shall include a waiver of subrogation rights against the Landlord and Property Manager;

(iii) "All risk" property insurance covering the Tenant's Contractors' owned, rented or leased tools, equipment and property and shall include a waiver of subrogation rights against the Landlord and Property Manager

(iv) Automobile insurance covering all owned, rented and leased vehicles, with a minimum $2,000,000.00 combined single limit of liability for bodily injury and property damage;

(v) Workers compensation satisfying to the Statutory requirements in the province of the Tenant's Work;

(vi) Where applicable, project professional liability insurance;

(vii) The Landlord and Property Manager and while on site, all Tenant's Contractors and subcontractors and trades of those insured, engaged in or connected with the construction of the Premises and Tenant's Work are listed as additional insured's on the commercial general liability policies identified under (a)(i) above and Landlord and Property Manager are identified as a loss payee under (a)(ii) above;

(viii) All policies of insurance relating to Tenant's Work must be in amounts and in form and with insurers acceptable to the Landlord, including an undertaking by the insurers to give at least (30) days' written notice of cancellation or material changes to the policy holder and the Landlord;

(ix) All insurance provided by the Tenant's Contractors above shall be primary and non-contributory to any insurance available to the Landlord or Property Manager;

(x) The Tenant's Contractors shall be liable for all injuries to persons and for damage to property caused by its operations and those of its employees engaged in its operations in connection with the Tenant Work. The Tenant's Contractors shall indemnify and save harmless the Landlord and the Property Manager and their respective employees, from all suits and actions for damages and costs to which the Landlord and/or the Property Manager may be put by reason of injury or death to persons and damage to property of the Landlord and/or the Property Manager and others whatsoever, in the performance of the work. Prior to commencement, the Tenant's Contractors will provide the Property Manager with written evidence of such indemnity;

(xi) The Tenant's Contractors will cause each of its subcontractors to purchase and maintain insurance of the types and in the amounts specified above except for (a)(ii) above and include Landlord and Property Manager and Tenant's Contractors as additional insured under their commercial general liability insurance; and

(xii) The Tenant must provide, to the Landlord, evidence of insurance coverage, by means of a Certificate of Insurance from the Tenant's or the Tenant's Contractor's insurers or by a certified copy of the actual policy documents, for (a) Tenant's insurance as required in the Lease, (b) Tenant's Contractors' insurance and any subcontractors (as outlined in this document) as amended from time to time by the Landlord, prior to the commencement of Tenant's Work in the Leased Premises and/or any other areas requiring access within the Building and (c) Tenant's Consultants insurance (as set by the Landlord) as amended by the Landlord, prior to commencement of the design development. Insurance coverage shall be at least the minimum stated in the Lease and the Landlord and Property Manager shall be named as additional insured.

(b) Where applicable, to have union affiliations compatible to those unions working on site at the time the Tenant's construction is to commence. All work being performed on behalf of the Tenant shall only be performed by contractors and personnel who are members of, or have contractual relationships with, trade unions or the association of trade unions which are the same as those employed in the Building by the Landlord where applicable or the Landlord's contractors. Currently this requirement only applies to First Canadian Place.

(c) The Tenant shall retain the Approved Contractors for the performance of the Tenant Work, notwithstanding the foregoing, Tenant's Contractors must be approved in advance and in writing by the Landlord.

(d) Furnish evidence of good standing with the Workplace Safety & Insurance Board; a valid W.S.I.B. Certificate is to be provided to the Landlord prior to initiation of the Tenant Work, which the Tenant's Contractors shall keep in force at all times for the duration of the Tenant Work. The Tenant's Contractors will confirm in writing that all employees engaged in the work are covered in accordance with the statutory requirements of the Province having jurisdiction over such employees.

(e) Engage the services of the Approved Contractors including but not limited to Tenant's Work involving fire alarm, sprinklers, fire protection systems, lighting controls, temperature controls, data/communications, roofing, locksmith, x-raying, air balancing, electrical, and mechanical.

(f) Furnish the Project Manager with all information listed in Section 3;

(g) Comply with all Applicable Laws including, without limitation, terms of the *Occupational Health and Safety Act*.

(h) Post on site all permits by Authorities. If the Tenant's Contractor fails to do so, the Landlord, at its option, may cause the workmen, subcontractors and suppliers of the Tenant's Contractor to stop all work and leave the Premises. Further, the Landlord, at its option may remove all materials and work installed by the Tenant or on the Tenant's behalf, at the Tenant's expense.

3.3 COMMENCEMENT OF CONSTRUCTION

The Tenant must carry out all construction work in strict accordance with the Approved Drawings. Likewise, the Tenant's design and construction work must comply with all Applicable Laws.

It is the Tenant's responsibility to ensure that the Tenant's Contractors observe and comply with Applicable Laws including, but not limited to *Occupational Health and Safety Act* and requirements of the Workplace hazardous materials information system and the safety and health regulations, policies and directives of the Landlord and the Landlord's contractor, as applicable, in accordance with Section 4.

The Tenant construction site will be hoarded and secured to prevent excess noise and dust proliferation. The hoarding will be removed by the Tenant's Contractor upon final inspection and approval of the installations by the Landlord.

For Office:
Where required, the drywall hoarding will be installed and painted by the Tenant's Contractor at the Tenant's expense.

For Retail:
The drywall hoarding will be installed by the Landlord at the Tenant's expense and painted and decorated by the Landlord at the Tenant's expense.

(a) Construction may proceed only after the Tenant and Landlord have complied with the following:

(i) The Tenant's Lease for the Premises has been executed;

(ii) The Tenant's final issued for construction documents (including, without limitation, drawings, specifications and manuals) have been approved in writing by the Project Manager and the Tenant has been advised to proceed with construction;

(iii) The Tenant has submitted a Construction Deposit based on three percent (3%) of the value of construction (minimum $5,000 and maximum $10,000) or the amount otherwise stated in the Lease, which amount shall have precedence;

(iv) The Tenant has provided acceptable evidence of insurance as per the Lease and this Manual, naming the Landlord and Property Manager as additional insured;

(v) The Landlord shall issue written notice to the Tenant advising that all the conditions prerequisite to the commencement of Tenant's Work have been complied with to the satisfaction of the Landlord provided such notice is without prejudice to any right or remedy available to the Landlord;

(vi) Tenant has delivered and/or provided the Designated Substance Report to the Tenant's Contractors and the Landlord prior to beginning any work; and

(vii) Tenant has provided a list of Tenant's Contractors indicating contact names and telephone numbers for emergency use outside Normal Business Hours.

(b) Construction may proceed only after the Tenant's Contractor has complied with the following:

(i) Provided copy of application and issued building permit(s) and hard copies of the City stamped permit drawings;

(ii) Posted all required permits on site, with a copy to the Project Manager;

(iii) Made available at the Leased Premises, a set of prints of the Landlord Approved Drawings and building permit drawings for the duration of the construction period for reference by the Landlord's and City Building Department authorized representatives;

(iv) Provided acceptable evidence of insurance for itself and all sub-contractors, as required by Section 3.2, (unless provided by the Tenant) to the Landlord, naming the Landlord and the Property Manager as additional insured;

(v) Submitted Notice of Project for the Tenant's Work (for projects over $50,000) subject to coordination with the Landlord's contractor as may be required by the Landlord in the circumstances;

(vi) Submitted a construction schedule;

(vii) Submitted valid certificate from Worker's Safety & Insurance Board;

(viii) Submitted copies of Addenda;

(ix) Provided a list of subcontractors indicating contact names and telephone numbers for after hour emergency use;

(x) Submitted completed Safe Work Access Permit Form from the Building Operations and Security Centre, prior to the commencement of work if applicable. (see Section 7.5 for advance notice schedule).

(xi) Signed acknowledgement of receipt of Designated Substance Report from Tenant and has issued a copy of the Designated Substance Report to Tenant's Contractors associated with the project and has put in place all necessary safety precautions required by Applicable Laws to remediate and/or otherwise contain the substances and hazardous materials outlined in the report.

3.4 PROCEDURES DURING CONSTRUCTION

(a) Tenant is to submit to the Project Manager during construction:

(i) Copies of all site-meeting minutes.

(ii) Copies of all contemplated changes to the Tenant's Work at time of issuance to Tenant's Contractors.

(iii) Copies of all site visit reports by the Tenant's Consultants.

(iv) Copies of all site reports from Authorities having jurisdiction.

(v) Copy of Designated Substance Report (unless provided by the Landlord).

(b) Inspection of Tenant's Premises as required:

(i) Prior to commencement of any Tenant Work, an inspection of Tenant's Premises, shall be performed by the Tenant, its agents and the Property Manager.

(ii) Signed acceptance letter shall be issued confirming acceptance by Tenant of the Premises and any damages or deficiencies shall be indicated at that time. No claims shall be considered for any items not identified on the letter.

(iii) The Tenant shall directly engage, at the Tenant's expense, Approved Contractors, for any mechanical, electrical, sprinkler, controls and balancing modifications or additions to the base building systems.

(iv) After completion of Tenant's Work another inspection shall be made between the Landlord's representatives and the Tenant for both Tenant areas and the floor, as well as the floors immediately above and below. Any damages caused by the Tenant's Contractors in the execution of the Tenant's Work shall be repaired by the Landlord's contractor at the Tenant's expense.

(v) The Tenant's Contractors may be issued revisions to the documents outlining regulations and procedures for Tenant's Contractors on the job site, from time to time as site conditions warrant it.

3.5 COMPLETION OF TENANT CONSTRUCTION

A deficiency inspection will be carried out by the Landlord upon completion of the installations. Please schedule such inspection with the Project Manager, at least forty-eight (48) hours prior to opening for business and the removal of the hoarding (by Tenant's Contractor).

(a) Upon completion of the construction the Tenant will submit the following closing documentation in PDF format and also on a USB flash drive:

Prior to opening for business:

(i) Final engineers' and architects/designers' inspection reports stating that the installations have been completed in accordance with the contract documents and Authorities having jurisdiction for occupancy permit purposes

(ii) Certificate of Substantial Performance as defined in the *Construction Lien Act* R.S.O. 1990, c. C.30 prepared by the primary consultant and proof of publication in the Daily Commercial News, as required therein.

(iii) Material & Test certificates for sprinkler and standpipe work, certifying that the installations conform to N.F.P.A. 14 standard respectively as applicable.

(iv) Fire suppression system verification and testing certificate (for food service tenants).

(v) A copy of approved Air Testing and Balancing report prepared by Approved Contractors.

(vi) A copy of approved electrical load balance report prepared by Approved Contractors.

(vii) Exhaust hood balancing report (for food service tenants).

(viii) Fire alarm system verification and testing certificate.

(ix) Final Electrical Safety Authority Certificate of Inspection.

(x) Confirmation from the Tenant that all electrical panels have been tagged with lamacoid nameplates and typed circuit directories updated.

(xi) Verification of all required meter installations, including remote readouts.

(xii) Confirmation that permits have been closed by Authorities having jurisdiction. (Property Manager is to attend final inspection especially for food service tenants).

(b) Within sixty (60) days of opening for business:

(i) Proof of closing of permits. Copy of "Inspection Status Letter" from the customer service of the City of Toronto Building Division, indicating that the project has been completed "substantially in accordance with plans issued with the permit(s)" and providing completion dates.

(ii) Tenant's Contractor's valid WSIB Certificate.

(iii) Complete set of "as built" drawings (including mechanical and electrical), both hard copy and AutoCAD format (DWG extension – most current version, with any required XREF, CTB and font files) approved by the Tenant's Consultants.

(iv) An executed statutory declaration from the Tenant and the Tenant's Contractor stating that all monies owing to their suppliers and subcontractors have been paid and that no liens have been registered against the Site or Premises.

(v) Proof of maintenance agreements for Tenant's equipment (mechanical/electrical)

(vi) Operations & Maintenance Manuals divisions 1 to 16.

(vii) Electrical load balance report.

(viii) Tenant MPAC Tax letter, Section Section 10 – Forms, for letter.

Note: In the event that the Tenant or the Tenant's Contractor has not provided the required close-out documents within sixty (60) days of opening for business or physical occupancy of the Premises, the Construction Deposit shall be forfeited. The Landlord in its sole discretion, may apply such funds (but does not have the obligation to) against necessary actions in obtaining the close-out documents itself.

SECTION 4 – RULES & REGULATIONS

4.1 WORK PLACE & PUBLIC SAFETY

The Tenant will, and will cause the Tenant's Contractor to, ensure compliance with all Applicable Laws and, in particular, the *Occupational Health and Safety Act* and ensure a safe and secure workplace. In doing so, the Tenant will, and will cause the Tenant's Contractor to, cooperate and coordinate their work with the Property Manager.

The Tenant's Contractor shall be the "constructor" under the *Occupational Health and Safety Act* exclusively with respect to the Tenant's Work within the Leased Premises. In those areas of the Building where the Tenant's Contractor is in control and performing the roles and responsibilities of the "constructor" (i.e.: Leased Premises), the Landlord, the Property Manager and their contractors agree to comply with all reasonable health and safety rules and instructions of the Tenant's Contractor while performing any of the Base Building Work within the Leases Premises.

The obligations of the Tenant shall include, without limitation:

(i) ensuring that all legal obligations imposed on constructors or on other persons supervising, completing or coordinating the Tenant's Work are properly performed,

(ii) ensuring that the Tenant's Contractor shall file a Notice of Project before beginning any Tenant's Work within the Leases Premises,

(iii) ensuring that, before beginning any Tenant's Work, the Tenant's Contractor shall erect, between the Leases Premises and the common areas, a barrier in accordance with specifications issued by the Property Manager, (Note: for retail renovations, Landlord will erect hoarding at Tenant's cost),

(iv) allowing the Property Manager, Landlord, or their contractors, access to the Tenant's Work area so that the Landlord and the Property Manager may carry out any Base Building Work in such area,

(v) promptly reporting all accidents to the Property Manager,

(vi) if any claim is made by anyone against the Tenant or Tenant's Contractor or their subcontractors on account of any accident, reporting the facts to the Property Manager immediately; and

(vii) conforming to the policies and procedures of the Landlord's or Property Manager's safety/environmental Plan as they relate to safety and environmental aspects within the Common Areas.

Tenant's Contractor shall submit to the Property Manager:

(i) Tenant's Contractor's "Occupational Health and Safety Plan" to be submitted prior to commencing work in the Building,

(ii) Tenant's Contractor's action plans to implement it's Occupational Health and Safety Plans for the Tenant Work, which are designed to effectively prevent accidents, to be submitted prior to commencing work in the Building,

(iii) a copy of all communications relating to the Tenant's Work with, and including all orders by the Ministry of Labour or other occupational health and safety enforcement authority,

(iv) a copy of all accident / injury reports in addition to the WSIB Form 7. Each report must contain a statement of actions that will be taken to prevent a recurrence.

The Landlord reserves the right to require additional or amended submittals pertaining to safety during the performance of the Tenant's Work at no additional cost to the Landlord.

The Tenant and Tenant's Contractor acknowledges and agrees that the Landlord has health and safety responsibility under the *Occupational Health and Safety Act* in respect of (i) any work or activity that is being carried out in the access/egress and/or common areas of the Building; (ii) any situation where there is overlap or contact between employees, subcontractors or workers of two or more Tenants/Tenants' Contractors at the Building; or (iii) in any other situation or area which appears to involve two or more Tenants/Tenants' Contractors (the foregoing (i) to (iii) collectively referred to as the "Common Areas"). The Tenant/Tenant's Contractor and all personnel entering the Building shall comply with the Landlord's or Property Manager's Safety/Environmental Plan and shall act immediately on direction regarding safety and work practices given by the Landlord or the Property Manager.

The role of the Tenant and/or the Tenant's Contractor within the Leased Premises in no way diminishes or relieves its obligation to recognize the Landlord's health and safety obligations with respect to the Common Areas and to comply with all rules and directions from the Landlord relative to such Common Areas.

All stairwell doors are to be kept closed at all times during construction for fire and safety reasons. Any construction site found to have stairwell doors propped open will be assigned a security guard, at the Tenant's expense, until the situation is resolved.

Notice must be given in writing to the Property Manager, a minimum of ten (10) Working Days in advance, of any proposed disruption to the Building's air, power or water supply. Any such disruption must be on weekends or evenings unless otherwise agreed to by the Property Manager. In addition to the above systems, the integrity of the Building's Life Safety or Fire Protection and Security Systems must be preserved at all times, no exceptions allowed.

The Property Manager will co-ordinate through the Tenant and the Tenant's Contractor(s), the preparation of a scheduled shutdown of any of the aforementioned systems in order to safeguard the Building and its tenants.

4.2 POLICING OF MEN, WORK PERMITS & SECURITY BADGES

The Tenant's Contractor will be responsible for the safety and actions of its tradesmen and delivery people. Any person found performing an unsafe act or exhibiting blatant disregard for existing work, or disrespect towards tenants or other people in the Building will be promptly removed from the Building and not permitted to return.

Work Permit/Access Request and Security Badges:
The Tenant's Contractor shall complete a weekly Work Permit at the Building Operations and Security Centre and obtain security badges for sub-trades for the project.

Safe Work Permit:
The Tenant shall require the Tenant's Contractors, upon the Property Manager's request, to identify all project hazards to the Property Manager and to provide written assurance to the Landlord, prior to commencement of the Tenant Work, that such contractor has reviewed the Landlord's safety policy, is aware of the specific hazards associated with and precautions which should be taken, and has the necessary safety training to perform such work. The Tenant and the Tenant's Contractor shall have full responsibility for ensuring that all work performed by them in the Building complies with the *Occupational Health and Safety Act*.

4.3 EMERGENCY CONTACT

The Tenant must provide the Tenant Services Representative with the name, address, and telephone number of the person to be contacted in case of an emergency having to do with the Tenant's Premises.

4.4 WORKING HOURS

The Tenant's Work shall be carried out after Normal Business Hours, unless authorized by Landlord in writing. In occupied buildings, Tenant's Contractors must observe the right of neighboring Tenants to the "quiet enjoyment'' of their premises and noise must be kept to an absolute minimum. Noisy work such as hammer drilling or other excessive noise-creating work is to be carried out after Normal Business Hours. The Property Manager has the right to temporarily shut down work if valid complaints are voiced by adjacent tenants. Any work that is required to be carried out at times other than specified above will require written approval from the Property Manager. This policy will also be imposed should work involve the emission of strong odors including but not limited to those from paints, solvents or sealers. Only low odour and low VOC (volatile organic compound) paints and sealers are to be used in the Building.

All work not contained within the demising walls and exposed to the public must be enclosed by full height, taped, sanded, drywall hoarding, painted to match the Landlord's standard colour and provided with a black vinyl base. No work is to proceed in areas exposed to the public during Normal Business Hours. (See Section 8.1 – Building Design Parameters).

4.5 SECURITY

The Tenant and the Tenant's Contractor(s) shall be fully responsible for the physical security of the Leased Premises and the contents thereof, throughout the construction period, which shall be deemed to have commenced at the time of turnover of the Leased Premises to the Tenant for construction of Tenant's Work.

Security supervision is required for all work outside of the Leased Premises, including deliveries, at the Tenant's expense.

4.6 MATERIAL DELIVERIES & HOISTING

Tenant's Contractors shall contact the Building's dockmaster who will advise of the times that hoisting facilities are available. Tenant's Contractors shall plan on doing the majority of hoisting, including garbage removal, outside of Normal Business Hours, including weekends.

Tenant's Contractors shall meet prior to tendering with the Project Manager and discuss hoisting requirements, due to anticipated high demand. Deliveries will only be received at the Loading Dock and shall be immediately hoisted to the Premises where material is to be used. There shall be no stockpiling of materials permitted at or in the vicinity of the loading dock. Unscheduled deliveries shall be refused and any material left unattended at the loading dock will be removed and costs assessed to the Tenant and/or Tenant's Contractor.

Bookings are accepted on a first come, first served basis and require prior arrangement by submitting the Property Manager's "Service Elevator Request" form. The freight elevators will be made available during Normal Business Hours and after Normal Business Hours at applicable rates (See Section 6 – Building Charges and Landlord Services and Section 7.5 – Cost of Base Building Services). Truck sizes are restricted and are to be confirmed with the Property Manager (see Section 8 – Freight Handling).

All materials shall be delivered through the loading dock facilities. Any contractor found moving materials into the Building in an unauthorized manner will be removed from the Building. Workmen are required to use the designated freight or service elevators: **under no circumstances are the passenger elevators to be used.**

Freight elevator doors, walls and ceilings must be protected from damage during transportation of materials. Elevator pads will be supplied by the Property Manager. Any additional protection required to prevent

damage shall be supplied by the Tenant's Contractor. Any damage, whether or not reported, will be repaired by the Property Manager at the Tenant's and/or Tenant's Contractor's cost.

4.7 PARKING & ACCESS

All required parking by Tenant's Contractors is their sole responsibility, together with applicable parking fees. Under no circumstances are vehicles to impede or block access to the parking garage or loading dock facilities, or park in reserved/prohibited areas. Vehicles found in violation of this requirement will be towed away with all costs borne by the owner of the vehicle.

All access to the project shall be through the loading dock. No entrance will be available or permitted through the ground floor lobby. Any contractor found accessing the Building in an unauthorized manner will be removed from the Premises.

Parking at the loading dock is not permitted except for delivery purposes as approved by the landlord.

4.8 FLOOR LOADING

The Tenant's Contractor(s) shall distribute material evenly across the floor and shall stack material over main trusses at column lines. Drywall piles are not to exceed 12" in height so as to prevent over-loading of the slab.

4.9 WORK AREAS

All construction materials, tools, equipment and workbenches must be kept within the Leased Premises throughout the construction period. All public lobbies, washrooms, stairs and corridors shall be kept clean and clear of construction materials. Should the public washrooms be used by the Tenant's Contractors, such contractors will be responsible for keeping the washrooms clean. The Building washrooms shall not be used for the cleaning of tools or the disposal of materials; these requirements should be discussed with the Project Manager in advance.

Any damage attributable to Tenant's Contractors will be repaired by the Property Manager at the Tenant's and/or Tenant's Contractor's cost.

No materials or tools shall be kept or stored inside electrical and/or mechanical rooms, unless used for work inside these rooms. No material shall be stored in the freight elevator lobbies or in any other fireman's access route. The Property Manager will, without notice, remove such materials and back charge the Tenant for the cost of this service.

The Property Manager is not responsible for the safekeeping of tools/equipment/material.

4.10 GARBAGE REMOVAL

It is the Tenant's responsibility to ensure that all Tenant's Contractors, including telephone companies, remove all garbage and construction debris in proper containers and leave the Leased Premises in a broom swept condition, on a daily basis.

Common Areas such as corridors, freight elevators and lobbies must also be kept clear of residual debris. Should the Landlord be required to remove the Tenant's Contractor's garbage, the Tenant will be charged for all associated costs, plus a fine of $500 per occurrence.

Only approved waste disposal contractors will be allowed on site. Arrangements for placing disposal bins must be made in advance through the Property Manager. Disposal bin should be placed on ¾" plywood to protect the loading dock finishes.

Construction Waste Policy

POLICY STATEMENT
The Property Manager is committed to minimizing potential adverse effects on the environment while promoting the use of efficient management systems and Tenant practices in the Building. Compliance with this environmental commitment is the responsibility of all parties employed or contracted by the Property Manager.

Through the adoption and adherence to the principles of reduce, reuse and recycle as well as following Regulations 102/94 and 103/94 of the *Environmental Protection Act*, R.S.O. 1990, c.E.19 the Property Manager together with its tenants and contractors will strive to minimize the potential negative environmental impact of excessive construction waste generation. The Property Manager is committed to conducting construction in our buildings in accordance with Applicable Laws, and where no law exists, to voluntarily adopt reasonable standards, where appropriate.

CONSTRUCTION WASTE MANAGEMENT PRACTICES
Construction and demolition work should be planned and managed in accordance with the Building's Construction Waste Policy available from the Property Manager and to incorporate the following practices.

(i) Reduce the materials brought to the site to the minimum required to construct the work and to the minimum required to package and transport the material.

(ii) Reuse material where appropriate on renovations or changes to existing work.

(iii) Recycle material by separation of recyclable material and diverting it to an appropriate recycling facility.

(iv) Adhere to *Environmental Protection Act*, Ontario Regulation 102/94 for Waste Audits and Waste Reduction Work Plans and to Ontario Regulation 103/94 for Industrial, Commercial and Institutional Source Separation Programs.

(v) Tenant's Contractors shall provide confirmation of proper disposal of construction waste in keeping with regulations and guidelines in effect in Ontario and Toronto.

4.11 TEMPORARY SERVICES

The Tenant shall arrange, provide, and pay for any temporary site telephone service required by the Tenant's Contractor. The Tenant's Contractor is responsible for the distribution of temporary power within the Leased Premises during the construction period. Exposed electrical cords are not permitted outside the Leased Premises. Tenant's Contractors are also required to provide a temporary filter for the HVAC system.

The following services will be provided by the Landlord for a fee as per prevailing Building rates (See Section 7.5), unless otherwise stated in the Lease.

- Temporary heat
- Hydro
- Washrooms
- Service elevators
- Garbage containers and Water

4.12 TEMPORARY FIRE PROTECTION

The Tenant and the Tenant's Contractor are responsible for providing operable fire extinguishers in the Leased Premises throughout the construction period. These extinguishers must be sufficient in number and of suitable types to combat a potential (type A, B, or C) fire in the work area and to suit the requirements

of the Building and Toronto Fire Departments.

The Base Building Standard fire extinguishers are not to be used for this purpose.

4.13 SPRAY FIREPROOFING

Removal or dislodgment of spray fireproofing material from steel decks, beams, trusses, and columns must be avoided wherever possible. When fireproofing has been disturbed, the Tenant's Contractor must notify the Landlord. All fireproofing must be replaced with a suitable and approved fireproofing material. The replacement material must be installed in accordance with Applicable Laws. In no case may the original level of protection be reduced. Spray fireproofing shall be reinstalled by the Landlord, at the Tenant's expense.

Note: The Landlord reserves the right to request, from the Tenant, an independent inspection of the fireproofing by a qualified consultant at the Tenant's expense.

4.14 FIRE-STOPPING

The Tenant's Contractor must ensure that all fire-stopping is reinstated where penetrations are required between building fire separations. The replacement material and method for reinstallation must meet Applicable Laws. A CSA-ULC approved material (i.e., "Firestop") must be used to seal all core and floor penetrations. All pipes passing through a floor penetration must be sleeved, caulked and waterproofed. If the Tenant's Contractor fails to undertake the appropriate provisions, the Landlord will complete the work at the Tenant's expense.

4.15 TESTING & TIE-INS

The Tenant must obtain the Property Manager's permission prior to any testing or the installation of any tie-ins to the Building's mechanical, electrical, fire protection, security or life safety systems. The Tenant will be held fully responsible for any damages which may result from such tie-ins and be charged for any necessary repairs. All costs associated with such tie-ins shall be at the Tenant's expense.

All tie-ins are to be done by the Approved Contractors only. Where the Tenant intends to tie into a closed loop system, the Tenant's system shall be flushed, cleaned, and certified clean by the Landlord's Property Manager prior to the first connection. A summary of the potential tie-ins follow.

(a) **Sprinkler System / Fire Protection System**
All revisions to the Base Building Standard sprinkler system must be approved by the Landlord. After completion of all Tenant modifications the Tenant's system must be water pressure tested at 200 psi for two (2) hours. Tenant's Contractor's Material & Test Certificate sheet must be witnessed by the Landlord's representative, and the sprinkler system will be reactivated once the test has been approved. The Tenant must provide hydraulic calculations for all modifications required to the Base Building Standard system. Requests for the sprinkler shutdowns must be processed through the Building Operations and Security Centre a minimum of seventy-two (72) hours before work begins. Costs for drain down and recharging of the sprinkler system testing and making this final connection by an Approved Contractor will be billed to the Tenant's account.

(b) **HVAC Shutdown:**
Requests for shutdown of Base Building Standard compartment units and air systems must be made a minimum of forty-eight (48) hours in advance of the shutdown date. A Tenant's request for extra air conditioning will take precedence over a contractor's request for a shutdown. All costs inclusive of additional security or operations staff for work carried out after Normal Business Hours, not on a Working Day, will be at the Tenant's expense.

Note: All shutdowns are subject to the Landlord's prior written approval.

(c) **Electrical Power Shutdown:**
All requests for electrical power shutdowns must be made in writing and submitted for written approval a minimum of two (2) weeks prior to the required shutdown. All costs inclusive of additional security or operations staff for work carried out after Normal Business Hours, not on a Working Day, will be at the Tenant's expense at prevailing Building rates.

Note: All shutdowns are subject to the Landlord's prior written approval.

(d) **Domestic Water Shutdown:**
All requests for water system shutdowns must be submitted for written approval at least forty-eight (48) hours before the shutdown date. All costs inclusive of additional security or operations staff for work carried out after Normal Business Hours, not on a Working Day, will be at the Tenant's expense.

Note: All shutdowns are subject to the Landlord's prior written approval

(e) **Revisions to Fire Alarm Speakers:**
All modifications to the Base Building Standard fire alarm speakers must be approved in advance and in writing by the Landlord. The Landlord's Approved Contractor must be used to disconnect, re-connect, and reinstall, as well as re-verify relocated fire alarm speakers during and after the base building warranty period, at the Tenant's expense.

(f) **HVAC Controls:**
Request for additional controls or modification to control wiring must be made to the Landlord and carried out by the Landlord's Approved Contractor, at the Tenant's expense.

(g) **Metering:**
All additional meters required by the Landlord shall be supplied and installed by an Approved Contractor. Associated costs shall be borne by the Tenant (refer to Sections 8.1B(office) or 8.2B(retail) – Metering).

4.16 ACCESS PANELS

The Tenant must provide access panels in floors, walls and ceiling construction of sufficient size as directed by its engineering consultants, the Property Manager and/or as required by Building Code to permit necessary access to services and equipment by the Property Manager or its agents. This includes all necessary structures to access such equipment. The design and location of access panels must be approved in writing and in advance by the Landlord.

4.17 LANDLORD'S ACCESS TO PREMISES

The Property Manager or its representatives, consultants and contractors shall have free access to the Leased Premises at all times for the purpose of inspecting work and retain the right to correct or complete any work deemed to be unsatisfactory.

4.18 POWDER ACTUATED DEVICES

Powder actuated tools must not be used to secure fasteners which support ceiling suspension systems or equipment suspended from the underside of slabs although they may be appropriate for fastening floor tracks.

4.19 DRILLING OR CUTTING

The Tenant's Contractors are prohibited from drilling, cutting or chase openings of any description in any part of the Base Building Standard structure without the prior written approval of the Property Manager. Any cutting and core drilling must be completed by an Approved Contractor.

Prior to cutting, core drilling, or chasing openings of any size through the Building's structure, the Tenant's Contractor must first mark the locations and have them approved by the Landlord's Base Building Consultant. Work of this type requires x-ray inspection of the slab, prior to drilling. All of the consulting services provided by the Landlord's Base Building Consultant and the cost of any x-ray required shall be at the Tenant's expense.

Precautions must be taken to ensure that cores do not fall on occupants or contents of the floor below and that all water is vacuumed away before draining to the floor below.

No coring or cutting will be permitted above occupied floors until after 10:00 p.m., x-raying after 12:00 a.m. and before 6:00 a.m., or at the convenience of the tenant below, at times arranged by the Landlord.

Any damage to architectural, mechanical, electrical and structural systems will have to be repaired by an Approved Contractor at Tenant's cost.

Tenant and/or Tenant's Contractor shall provide temporary firestop material in any penetrations through fire-rated walls or slabs to maintain appropriate smoke/fire separations during construction. Fire separations are to be restored to Base Building Standard condition.

4.19.1 POST-TENSIONED SLABS (Specific to 2 Bloor Street East property)

Most of the office tower floors within the building are constructed with **post-tensioned concrete**. Prior to commencing any work that involves alterations to the structural system, such as coring, reinforcements, or chipping, the Tenant's Contractor must schedule a meeting with Building Operations to review the proposed changes.

X-ray scans of the proposed areas must be completed, and the results of these scans must be reviewed and approved by the base building's structural engineer, WSP. All inquiries to WSP should be directed to Sam Schiafone, Leah MacEachern or Miki Brzakovic; contact details are provided in 'Section 7.2 - Base Building Consultants'.

The Contractor shall be responsible for any necessary repairs of **post-tension cables** damaged during course of construction.

As general guidance, we recommend maintaining the following minimum clearances between any alterations and structural components, subject to further review and approval by the base building consultant:
1" for rebars
2" for conduits
4" for post-tension cables
2" for beam flanges and joists
Where multiple cores are to be drilled in the same area, the minimum clear spacing between adjacent cores should be the diameter of the larger core in all directions.

4.20 WELDING & ANY OPEN FLAME WORK

Open flames for welding, cutting or other purposes are not permitted without the prior written consent of the Landlord, as these activities may trigger a fire alarm. The Tenant or Tenant's Contractor must give the Landlord at least forty-eight (48) hours' notice, in writing, and must receive from the Property Manager a "permit" before the work is to be done. If pressurized gas cylinders are used, the Tenant's Contractor must ensure that the use is in accordance with all requisite safety provisions and requirements. The Tenant shall ensure that the area around the work is continuously monitored during and one (1) hour after the welding or open flame work has been completed, to ensure that there is no danger of fire. An operational fire extinguisher must be available in the immediate vicinity of the work, in addition to those already present. A Work Authorization permit requesting the deactivating of a floor's Fire Alarm Systems must be submitted to the Property Manager for written approval prior to any work commencing.

4.21 FIRE ALARMS/DEACTIVATION OF SMOKE ALARMS

Prior to carrying out work which results in heat or fumes being generated, including but not limited to welding and cutting with a torch, all open flame work, all grinding, spray painting, cutting (wood, steel, floor etc), sweep dust near a smoke detector, sanding, core drilling, draining and filling of sprinkler systems and testing of maglocks or other devices added to the fire alarm system, the Tenant or Tenant's Contractor must give the Property Manager at least forty-eight (48) hours' notice, in writing, so that smoke alarms on the necessary floors can be deactivated.

In the event that the Tenant or Tenant's Contractor fails to notify the Property Manager regarding the above noted work and a fire alarm is activated resulting in a false alarm, the Tenant will be charged with the Fire Department's cost, all associated costs incurred by the attendance of the Property Manager's Building personnel, plus a fine of $1,000 per occurrence.

A subsequent alarm may result in prohibiting the offending contractor from the Site and additional life safety management measures as required by the Landlord. All fines and charges will be the responsibility of the Tenant.

Since some time could elapse between the occurrence and the Fire Department invoice, Tenants will be advised in writing immediately after the alarm that a Tenant's Contractor was responsible and that charges will be forthcoming. It is the responsibility of the Tenant to recover such costs from the Tenant's Contractor responsible.

In the event the Tenant does not pay such amount within five (5) days after demand, the Landlord shall have the right, without limitation to any other right or remedy for the collection of such amount.

Once work has been completed by a Tenant's Contractor in an area where a request was made for the fire alarm to be isolated, it is the responsibility of the Tenant's Contractor to contact the Building Operations and Security Centre to have the zone(s) restored. If the Tenant's Contractor leaves the site unsupervised and without fire protection, the Tenant's Contractor will be fined $500 per offence.

Questions regarding fire safety procedures are to be directed to the Property Manager.

In the event that the sprinkler or standpipe system is required to be drained, the Tenant's Contractor will be responsible for additional charges for Fire Watch.

Note: False fire alarms can be avoided by strictly adhering to the Work Permit Authorization procedure and specifying the exact nature of work to be performed. Any additional work required, as the project proceeds must also have prior written approval.

Simultaneous impairment of fire alarm and fire protection systems is not permitted (i.e. hot work is not permitted if the sprinkler system is impaired). Fire alarm and fire protection systems may not be impaired during Normal Business Hours in occupied areas.

4.22 FASTENING

The Tenant's Contractors are not permitted to use mechanical fastenings for curtain walls, window frames, or walls which may contain air/vapour barriers or special fire rated structures. Clips in lieu of screws must be used to fasten interior walls to the ceiling grid.

4.23 DAILY CLEAN-UP

The Tenant must ensure that corridors are left free of debris and dirt and marks are removed from corridor walls, floors, doors etc., on a daily basis. If this work is not completed by the Tenant's Contractor, the Landlord will provide this service at the Tenant's expense.

Drains, including janitor's sink may not be used to dispose of materials such as drywall, concrete or paint, which may clog or hamper flow through the drainage system. Tenant's Contractors must make arrangements to dispose of such materials off-site. If the drainage system becomes clogged or restricted, the Landlord may undertake, at the Tenant's expense, a full cleanup program.

4.24 PRE-OCCUPANCY CLEANING

Upon completion of Tenant's construction, the Tenant is to ensure that Tenant's Contractor cleans up and removes all construction debris from the Premises, together with all equipment and tools and the Premises are left clean and in move-in condition. Public lobbies, circulation corridors, and stairwells must also be given a post-construction cleaning.

Prior to regular office cleaning procedures, the following items, but not limited to, must be cleaned at Tenant's Contractor's cost:

(a) Light fixtures and lenses;
(b) Ceiling grid and ceiling tiles;
(c) All floor coverings;
(d) Public areas and service areas affected by the Tenant's work: corridor walls and doors, service /utility rooms, stairwells, corridors and lobbies;
(e) Washrooms;
(f) Fan coil units, if applicable;
(g) Supply air diffusers;
(h) Return and exhaust air grilles;
(i) Lint screens and coil (cleaning shall be carried out by the Landlord's base building cleaners and charged to the Tenant's account);
(j) Inside faces of all exterior glazing including window frames and mullions;
(k) All interior fixtures and glazing.

Property Manager will inspect the pre-occupancy cleaning to ensure that the Premises are acceptable for occupancy. In the event cleaning is not performed by the Tenant's Contractor to the Landlord's satisfaction, the Landlord's contractor will perform such work as deemed necessary prior to opening for business, at the Tenant's expense.

4.25 PROTECTION OF BASE BUILDING ELEMENTS

The Tenant and Tenant's Contractor shall take great care to protect all Base Building Standard elements including, but not limited to, the following:

(a) Public area: The Tenant shall be responsible for cleaning and making good, at the Tenant's expense, any damages made by the Tenant or Tenant's Contractor in all public areas. In particular this includes, but is not limited to, any damage to glazing, wall and floor finishes including sidewalks, laneways, and base building fixturing.

(b) The Tenant shall protect all Base Building Work with appropriate protection materials and shall obtain the Landlord's approval of the protection procedure proposal prior to commencing work, moving construction materials or equipment across or within public areas.

(c) Mechanical and electrical rooms and system components: The Tenant shall be responsible for cleaning and making good, at the Tenant's expense, any damages to the mechanical and electrical components and rooms caused by the Tenant's Contractors. In particular, floor drains shall not be used for dumping of liquid, garbage, etc.

(d) Washrooms: The Tenant shall be responsible for cleaning and making good, at the Tenant's expense, any damages made by the Tenant or Tenant's Contractor to the washrooms designated for Tenant construction use. The Tenant or Tenant's Contractor shall not use the washrooms for cleaning of construction tools, such as paint brushes, etc.

(e) Stairs and access areas: The Tenant is responsible for cleaning and making good damages, at the Tenant' expense, to stairs and areas used for access during Tenant's Work. Fire doors in stairs shall not be wedged open by the Tenant or Tenant's Contractor.

(f) Elevators: The Tenant shall use only those freight elevators designated by the Landlord for vertical transportation of construction personnel, material, and equipment. Any damages to the elevator cabs, mechanisms, doors and frames caused by the Tenant or Tenant's Contractor, shall be repaired by the Landlord at the Tenant's expense.

(g) Demising partitions: The Tenant shall be responsible, at its expense, for repairing any damage made by the Tenant or Tenant's Contractor to the demising partition of the Premises.

(h) Historic elements: The Tenant shall not alter in any shape or form historically designated elements of the Development. Any damage caused will be repaired by the Landlord at the Tenant's expense to the satisfaction of the City of Toronto's Historical Board.

Any damage caused by the Tenant's Contractor, material suppliers, or anyone else for whom the Tenant is responsible in law to the Development or to any property of the Landlord or other tenants shall be repaired forthwith to the satisfaction of the Landlord by the Tenant or, at the Landlord's option, by the Landlord at the Tenant's expense.

4.26 HAZARDOUS MATERIALS

All waste of a hazardous chemical or flammable nature must not be allowed to accumulate. Such waste must be removed from the Site as quickly as possible, or when directed by the Property Manager, but no later than the same day, in accordance with the material's Material Safety Data Sheet ("MSDS").

The Tenant's Contractor shall provide to the Landlord at the commencement of the project and continuing for the duration of the project MSDS for all regulated products and designated substances.

4.27 ACCESS AND DELIVERIES

Personnel access and material deliveries to the Leased Premises are to be only by routes designated by the Property Manager. The handling of items which, due to weight or dimension, require special treatment must be reviewed and arranged with the Property Manager.

Before the commencement date of the Lease, Building security is responsible to unlock the Premises each day for Tenant's Contractors' access. All construction personnel will be required to sign in and out daily at the Security Console Desk.

4.28 SYSTEM PROTECTION AND CLEANING

No work shall commence until arrangements have been made with the Property Manager for the protection of air conditioning units. It will be the Tenant's responsibility to protect and return the filters or the Building systems to their original state in accordance with the Property Manager's specifications. It is also required that any perimeter system and window covering (if applicable) be vacuumed in order to restore it back to a "free of construction dust" condition. The perimeter unit cleaning shall be completed by the Property Manager at the Tenant's expense, as special cleaning techniques are required.

4.29 FLOOR COVERINGS

Carpets may not be glued to the floor, except where a "quick-release" type of adhesive is used and Landlord's written approval has first been obtained.

Note: The Landlord reserves the right to approve other methods of application.

Hardwood cannot be glued to the concrete slab. A sub floor or other means is to be used as approved by Landlord.

4.30 WORK CONFLICT

Tenant's Contractors' work shall be performed in a manner that will not interfere or conflict with any activities of the Property Manager, other tenants or the operation of the Building.

The Tenant must immediately correct any work which does not meet with the approval of Applicable Laws, notwithstanding the fact that the Tenant's drawings may have been approved previously by the Property Manager, its consultants or Authorities. Should the Tenant unduly delay in correcting the fault, the Property Manager may make the necessary correction at the Tenant's expense.

Any workmanship faults or deficiencies which can be reasonably attributed to the Tenant's Contractors, following completion of the work, shall remain as a contractual responsibility, subject to correction without charge to either the Landlord and/or Property Manager or the Tenant involved. Accordingly, no contract shall be considered complete without an undertaking in writing and appropriately endorsed with adequate warranties and guarantees; such undertaking to be submitted to the Tenant, with a copy to the Property Manager, upon completion of work.

4.31 ROOF WORK/ACCESS

Under no circumstances will the Tenant and/or Tenant's Contractor enter onto the roof without first obtaining prior written permission from the Landlord. All roof openings will be carried out by the Landlord's Approved Contractor at the expense of the Tenant. Tenant's Contractor will be required to sign the Building's standard "Roof Waiver" form.

4.32 FINISH HARDWARE/LOCKSMITHING

Door hardware for entrances must be keyed to the Base Building Standard master keying system. Only the Property Manager's locksmith will be responsible for producing master keys. Glass entrances must have interchangeable cores (IC) keyed to the Building grand master to minimize costs when rekeying the locks. (See Section 7.3 – Approved Contractors).

4.33 AIR BALANCING

The Tenant must provide the Landlord with an air balancing report upon completion of all Tenant's Leasehold Improvement work. The report must be completed by the Landlord's designated air balancing company, at the Tenant's expense, and must be reviewed by the Landlord's consultant prior to final submission to the Project Manager. The report is to include the following:

(a) CFM at each light troffer and diffuser outlet when the thermostat is calling for full cooling and full heating.

(b) Temperature at furthest light troffer and diffuser.

(c) CFM, static pressure and temperature at AC-unit outlet when thermostat is calling for full cooling.

(d) CFM and static pressure at exhaust grille and/or air boot outlet.

(e) Supply and return air CFM, static pressure and temperature at main duct leaving and returning to mechanical room when thermostat is calling for full cooling.

(f) Design and actual readings in all cases

Any change to air handling equipment shall be noted on an adhesive label showing original and revised minimum and maximum CFM. This label shall be at least 4" x 2" and placed in a readily visible location.

All changes to piping, duct work, and equipment shall be recorded in a record set of drawings and kept on-site at all times.

4.34 WATER BALANCING

Water balancing by an Approved Contractor is required for all tie-ins to Base Building Standard water systems. The following items must be noted in the final report:

(a) GPM at each piece of equipment

(b) Pressure drop at each column

(c) Entering and leaving water pressures and temperatures

(d) Final marked position of balancing valves

(e) GPM at main service

(f) Other balancing as directed by Property Manager

Each piece or equipment tied into a Base Building Standard water system must be equipped with a circuit-balancing valve.

4.35 AIR CONDITIONING UNITS

Where air conditioning units are disconnected so that Tenant Work may take place, the units must be fully serviced by the Tenant before being reconnected to the Building system. Notice of such disconnections must be submitted in writing to the Property Manager. After the work is completed, the mechanical systems (chilled water, heating and condenser) must be flushed (both new and used lines) and samples must be provided to the Landlord.

Additional air conditioning units shall only be installed where required. Units may be added to the Base Building Standard chilled water system where available. All piping shall be pressure tested at one hundred fifty percent (150%) of operating pressure, tests shall be witnessed by the Property Manager. All piping is to be chemically cleaned and flushed to the Property Manager's satisfaction. The Base Building Consultant shall supervise the cleaning process. Two (2) samples shall be required for testing and acceptance of cleaning as follows:

(a) with chemical cleaner added, after circulation as specified

(b) after flushing for a time as prescribed by the Base Building Consultant

All products used for cleaning shall be acceptable to the Base Building Consultant. Prior to tie-in to the Base Building Standard system the above samples must be tested and accepted, and pressure testing completed, after which obtain written approval from the Property Manager allowing the tie-in to take place. Failure to do so may result in the Property Manager undertaking a chemical cleaning of the projects piping as well as cleaning of the associated Building system at the Tenant's expense. For this reason, Tenant's Contractor is urged to work closely with the water treatment consultant (see Section 7.3 - Approved Contractors).

All piping circuits shall be equipped with isolation valves at the system riser and at each piece of equipment, suitably tagged and identified. All piping is to be properly labeled identifying system and direction of flow every 20' and where piping passes through floors or walls. Each piping circuit shall be complete with circuit balancing valves for balancing purposes and future use. All chilled water, condenser water piping and condensate piping shall be insulated when installed enclosed in ceiling spaces, etc. Supplemental air conditioning units installed in electrical, communication and like areas shall be equipped with full coverage drip trays, piped to drain.

Domestic water connections for backup purposes must be complete with back flow preventers per plumbing code requirements and be valved at the A/C units (tagged and labeled). Backflow prevention devices shall be installed in accordance with applicable codes and standards including the Ontario Plumbing Code and CAN/CSA-B64.

Backflow prevention devices shall be field tested in accordance with CAN/CSA-B64.10-94. Such testing shall be witnessed by the Approved Contractor or another individual as designated by the Landlord. Confirm the testing with a letter from the Approved Contractor, to the Property Manager. This testing shall take place prior to the system being put into service.

Automatic switch over valves are not permitted, a control sequence must be provided for change over from condenser water to domestic water. The control sequence will be verified during A/C unit commissioning and thereafter approved by the Property Manager. A framed schematic, together with a control sequence and instructions for valve position during switch over, chemical cleaning and normal operation must be placed adjacent to the A/C unit for future reference. All valves must be permanently labeled or tagged.

A water meter reading in cubic meters (m^3), complete with remote read out for the domestic water back up feed must be installed without exception.

A/C units utilizing domestic water as a primary cooling medium are not permitted due to their environmental impact.

Submit unit specifications, catalogue cuts, etc., to the Project Manager for acceptance. The maintenance and upkeep of tenant owned A/C units shall be the Tenant's responsibility. A maintenance contract, with an Approved Contractor, must be maintained at all times at the Tenant's expense. Forward a copy of the contract to the Project Manager, for records and review. All units using a condensate pump shall be wired such that if the condensate pump fails, the air conditioner cannot run.

4.36 TENANT'S WORK TO BE PERFORMED BY THE LANDLORD'S APPROVED CONTRACTORS

The Tenant's Work set out below shall be performed by the contractors designated by the Landlord (refer to Section 7.3 – Approved Contractors) at the expense of the Tenant:

(a) Any Tenant Work which could affect the structural component of the Building;

(b) All approved modifications or connections to the Building systems, including all work outside the Tenant's Premises (i.e. the Base Building Standard heating, cooling, ventilation, exhaust, controls, electrical distribution and life safety systems as installed by the Landlord);

(c) The provision of additional capacity such as electrical, telephone, air handling, air conditioning, etc.;

(d) Installation of approved modifications to the fire detections and emergency communication system;

(e) Patching of Base Building Standard fireproofing;

(f) Any drilling, cutting, coring and patching for conduit, pipe sleeves, chases, duct equipment or openings in the floors, walls columns or roofs of the Building as reviewed by the structural consultant and approved by the Landlord;

(g) Installation of any mechanical attachments or other fasteners to the exterior façade (ground floor tenants only); and

(h) Supply and installation of electrical sub-meters and BTU meters. Tenant's Contractor is responsible to supply and install water meters and gas meters, where required.

4.37 GENERAL TENANT CONSTRUCTION GUIDELINES

Standard of Workmanship and Material: All work by the Tenant and Tenant's Contractor(s) within the Leased Premises shall be completed with high quality environmentally responsible materials. All workmanship and materials shall be equivalent to the Base Building Standard and quality. Inferior materials and workmanship, which do not meet the Base Building Standard or conform to governing codes, shall be replaced at the Tenant's expense.

I. Architectural

(a) Partitions and fixtures should not prevent access to mechanical equipment, air handling equipment i.e., controls, thermostats or other items that require periodic service. Further, partitions should align with window mullions and perimeter columns. Where applicable, to facilitate the removal of exterior windows, removable filler panels are to be used in order to extend partitions to the window mullions. (See Section 9 – Typical Standard Details).

(b) Solid ceilings are to be provided with access panels to allow maintenance of plumbing connections, reheat coils, dampers, light fixtures, electrical junction boxes, alarm bells and other equipment with the potential for future access for maintenance or adjustment. If there is any doubt, the Property Manager must be consulted prior to the ceiling being closed.

(c) The Tenant's Contractor(s) is/are responsible for the cleaning of air handling equipment and filters, once the project has been completed. Such work must be to the satisfaction of the Property Manager.

(d) Partition changes will often necessitate a review and revision to the air handling system. i.e. supply and return ductwork, ceiling baffles and balancing, in order to achieve tenant comfort. Partition changes will often necessitate a review and revision to the sprinkler system to provide suitable coverage.

(e) Locations requiring heavy loads, i.e. equipment, concentration of filing cabinets, safes and/or vaults, should be identified on drawings and loading checked and accepted by the Base Building Consultant. Any fees associated with this approval will be at the Tenant's expense.

(f) Full height partitions in tenant spaces require return air openings suitably sized for the required air volume.

(g) In multi-tenant floors new suite entrance doors are to match Base Building Standard. Existing temporary non-base building suite doors are not to be reused.

(h) Do not obstruct thermostat location with equipment of fixtures; Coordinate thermostat locations with mechanical Base Building Consultant.

(i) Keying of locks to be done by Base Building Consultant locksmith where applicable.

(j) Only water-based sealers are to be used for wood or stone flooring. No solvent sealers are to be used. Only low odour and low VOC (volatile organic compound) paints and sealers are to be used. Only low odour and low VOC (volatile organic compound) paints and sealers are to be used.

(k) All exposed metal furring at air slots is to be painted to match adjacent surface.

(l) Where drywall baffles occur above ceiling, they are to extend across door openings and glazing.

(m) Baffles are to be tightly fitted and caulked around ductwork and piping joints are to be taped.

(n) Ceiling System Modification: Keep the ceiling in the Premises at the Base Building Standard height. No holes are to be drilled or punched in the base building T-bar system. Removal, relocation and/or replacement of installed ceiling tiles will be the responsibility of the Tenant at its expense. Ceiling tiles should be handled carefully to prevent damage. Any change in the Base Building Standard ceiling height or material must be approved in writing prior to the commencement of work. Follow all code requirements where fixtures are relocated or new fixtures added adjacent to one another, i.e. the fixtures shall be self-supporting, independent of the ceiling.

(o) Partitions Perimeter Wall: double sided tape must be used where Tenant partitions butt to perimeter curtain wall, columns, core walls, demising partitions and ceilings. Fastening shall be accomplished without screws or bolts. All partitions which butt the curtain wall must be centered on the window mullions.

(p) Above Ceiling Baffles: The area above the finished ceiling acts as a return air plenum for the HVAC equipment. Care must be taken when introducing products and elements to this area. The use of fiberglass insulation for soundproofing, baffles, demising, air transfers, etc., is discouraged. Any fiberglass installed above the t-bar ceiling must be complete with an air/vapour barrier, sealing in all fibre. As an alternate, foil wrapped fiberglass with the unsealed edges painted (sealed) could be utilized. All to meet OBC requirements relating to flame spread and fibre retention.

II. Electrical, Communications and Cabling Contractors

(a) **Codes & Standards**
Complete the installation of the work in accordance with latest editions of the Ontario Building Code, Ontario Electrical Safety Code, C.S.A. Standards, U.L.C., N.F.P.A., O.S.H.A. and other Codes as required.

(b) **Materials, Equipment and Installation**
All materials and equipment shall be new, C.S.A. certified and manufactured to CSA specified.

Where there is no alternative to supplying equipment which is not C.S.A. certified, obtain special approval from the local Electrical Safety Authority.

Provide Certificate(s) of Acceptance from the Authorities Inspection Department, upon completion of the work.

Provide all conduit up to and including 101mm (4”) size, as EMT thin wall with steel set screw type fittings and weatherproof connectors with “O” rings in the sprinklered buildings. Bushings and connectors to be c/w insulated throat.

Provide flexible metal conduit for connection to motors, transformers and when crossing Building expansion joints.

Install conduits to conserve headroom, parallel and perpendicular to Building lines. Do not caddie clip conduits to ceiling hangers.

All empty conduits shall be complete with nylon pull string.

Work in other tenanted premises (adjacent, above or below) is to be arranged through the Property Manager. All such work will be after Normal Business Hours. Security supervision is required at all times, the cost of which will be at the Tenant's expense.

Light switches are recommended for all private areas and occupancy sensors for low-use areas.

(c) **Inserts, Hangers & Sleeves**
Do not use any Base Building Standard supports or equipment, including ceiling support system.

(d) **Cutting & Patching**
All cutting and patching required to the existing Building structure for the work shall be included in the contract and be acceptable to the Landlord.

Where conduit pass through fire rated walls or floors, provide fire stopping material listed with and bearing label of CSA and ULC and maintain same fire rating of building component penetration.

(e) **Access Doors**
Wherever any Base Building Standard equipment requires accessibility, maintenance or adjustment, provide access doors approved by Base Building Consultant and Landlord. Arrange for its installation by the division in whose work it occurs.

(f) **Core Drilling**
Before drilling floor slab or structural walls, x-ray slab or walls and have the locations accepted by the Landlord in writing.

Any existing Building service damage by core drilling must be repaired immediately at no cost to the Landlord.

Floor drilling is to be carried out after Normal Business Hours and at a time acceptable to Landlord.

Tenant's Contractor(s) is/are not permitted to drill, cut or chase openings of any description in any part of the Base Building Standard structure. Where such work is deemed to be necessary and acceptable to the Property Manager (and the Property Manager's structural engineers), it will be carried out by an Approved Contractor (see Section 7.3 - Approved Contractors). Any such work will require X-ray inspection of the slab prior to cutting or drilling. The Tenant shall be responsible for all costs relating to such work, including review and approval by the structural Base Building Consultant.

Unused electrical/telephone floor holes must be properly filled with concrete and a suitable plastic cup/plug. The Tenant's Contractor(s) will remove any abandoned wires in raceways or ceilings.

Tenant's Contractor(s) will be responsible for ensuring that openings, through walls or floors, are properly sealed, to safeguard the fire rating of electrical rooms and other spaces. Replacement fire-stopping will be installed in accordance with Building and Applicable Laws. Under no circumstances shall the level of fire protection be reduced.

(g) **Interruption of Services**
Interruption of electrical service to any part of the Building shall occur only by pre-arrangement with and at time suitable to the Property Manager. Interruptions shall only occur after Normal Business Hours.

(h) **Record Drawings**
Tenant's Contractor is to submit a set of record drawings and AutoCad disk to electrical Base Building Consultant for their approval and forwarding to the Landlord.

(i) **Grounding**
Ground all equipment in accordance with latest edition of the Electrical Safety Code. Provide separate green insulated ground conductor in every conduit to all devices, luminaries and feeders (panelboards, splitters, disconnect switches, etc.).

Tenant's Contractor(s) will be responsible for ensuring the need for any special grounding for computer connections and that proper interfaces are used to avoid false alarms.

(j) **Wire & Cable**
All wire and cable shall be copper, minimum 12 gauge, No. 12 and No. 10 solid, No. 8 and larger stranded, with RW90 insulation, 600 volt rating.

BX #12 may be used in ceiling space from ceiling distribution box down to receptacles in partitions. BX runs in ceiling space not to exceed 3048mm (10'-0") in length. Do not run BX cables into panelboards.

All work by electrical and/or communications contractors will include zone conduit and/or cable tray for voice/data communications, a/v, security or similar low voltage cabling. The use of free-air cables is not allowed with the exception of FT6 rated cables, which shall be neatly and securely fastened either in cable tray or appropriate cable supports and harnesses with maximal intersupport cable sag of 6" and spaced a maximum of 6' apart. All cables shall be completely supported by the harnesses so that no weight is transferred to any other existing non-structural fixture or ceiling cable structure. Cable supports are not to be supported from T-bar support system. Provide cable installation and suspension details in addition to cable specifications.

Where plenum rated communication cables are used, they must not be attached to the suspension wires supporting the T-bar. Laying the cable on top of the acoustic tiles is not acceptable or permitted. The Property Manager or the Landlord will not assume any responsibility for damage which may result from the Tenant's Contractor's failure to observe this requirement.

Tenant data and voice telecommunications equipment must not be installed in base building telephone rooms.

No telephone, communication, data, security, computer or other cables may be installed in the Building without the prior written approval and consent of the Property Manager. In any event, no wiring of any kind shall be installed without the required conduiting; nor shall any loose wire or cable be allowed to remain unencased or unpanelled in the ceiling plenums unless approved for such installations and installed in a manner acceptable to the Landlord.

All telephone communication cables must be identified at every floor level within the communication riser. Each cable or group of cables must be identified with the name of the Tenant, the installing contractor's name, telephone number and the date of installation. The installation of all infrastructure cabling within Base Building Standard risers shall be in accordance with the Base Building Standard cabling infrastructure management specifications and requirements.

Failure to comply with this essential requirement will oblige the Property Manager to take the appropriate corrective measures wholly at the Tenant's expense.

Before proceeding, contact the Building Operations and Security Centre who will arrange for access to Telephone Rooms

All Tenant Work to be done in the telephone rooms and infrastructure, will be carried out exclusively by the Building approved cabling contractors.

All sound masking cabling and speakers will be supported independently from the ceiling.

(k) **Conduits & Conduit Fittings**

Conduit is to be used in all inaccessible areas, the ceiling plenum and for all home runs, BX cable is acceptable for short runs (not to exceed 10 l.f.) and accessible, but not visible (concealed) locations. Conduit must be secured to the structure. Conduit hung from other conduit, ceiling components or equipment will not be permitted.

No bare wire is acceptable in ceiling spaces used as return air plenums. Tenant's Contractor(s) will ensure that wires shall be carried in EMT or flexible metallic jackets.

(l) **Service Equipment**

All new panelboards, disconnect switches, meters, transformers, etc. to be copper windings/bus-bars, same manufacture rating and type as base Building equipment unless otherwise noted. Molded case circuit breakers to be bolt-on and same manufacturer, rating and type as base building breakers. All ATS's and surface mounted panelboards to be sprinkleproof.

Tenant's Contractor(s) will ensure that electrical panels, disconnects, and meters are properly sized and identified immediately upon completion of project. Provide mechanically attached lamicoid nameplates to all equipment. Lamicoids to match Base Building Standards.

Tenant's Contractor(s) will ensure that breaker and panel directories are updated upon completion of construction. Breaker and panel directories shall be typewritten.

Dry type transformers shall be of the same manufacturer as the base Building but with a design K factor of 13 and with electrostatically shielded, copper windings. Provide double lugs on transformer neutrals for connection of cables. Transformers shall not be "T-Tap" type.

Ceiling mount transformers up to 45 KVA with suspension rods and spring isolators, transformers 75 KVA and larger to be floor mounted on Korfund isolation pads unless otherwise noted.

New panel boards, disconnect switches, splitters, meters, etc. are to be as per Base Building Standard.

No Tenant panels, transformers or distribution equipment shall be installed in the base Building electrical rooms except upon availability of space and Property Manager's Landlord's prior written approval (exact location must be provided). Any additional distribution equipment required by the Tenant shall be installed within the Tenant's Leased Premises.

Upon completion of all electrical work, a hydro inspection is required. Tenant's Contractor will coordinate same through the Property Manager.

(m) **Fire Alarm System**
Any changes to the Fire Alarm or Life Safety Systems must be installed and verified by the Property Manager's Approved Contractor as per National Standards of Canada specifications CAN/ULC-S524-M91 and CAN/ULC S537-97 (or the latest updated version) to preserve the integrity of Life Safety Systems. This includes any security door locks interface (electromagnetic locks) to the Fire Alarm System.

At least five (5) business days' advance notice of proposed dates must be provided for all verification work on the fire alarm system.

The Base Building Standard fire alarm system is under warranty. All electrical work including modifications, tie-ins and verification of the fire alarm system must be conducted by the Base Building Consultant at Tenant's expense. Tenant's Contractor(s) must make prior arrangements with the Property Manager for any tenant work to be performed that will affect the integrity of the Building's life safety systems.

(n) **Smoke Detectors**
Smoke detectors and duct-mounted smoke detectors will be isolated when work in an area may activate a smoke alarm (i.e. open flame, cutting or sanding). In some circumstances the isolation will be completed after Normal Business Hours at the Property Manager's sole discretion. Provide forty-eight (48) hours' advance notice of all proposed dates for isolation.

(o) **Heat Detectors**
Heat detectors will be isolated when work in an area may activate a heat detector alarm (i.e. open flame). In some circumstances the isolation will be completed after Normal Business Hours at the Property Manager's sole discretion. Provide forty-eight (48) hours' advance notice of all proposed dates for isolation.

(p) **Pull Stations/GA**
Pull stations will be isolated when work in an area may activate a pull station alarm or a GA alarm. In some circumstances the isolation will be completed after Normal Business Hours at the Property Manager's sole discretion. Provide forty-eight (48) hours' advance written notice of all proposed dates for isolation.

(q) **Speakers**
Service work on a fire alarm speaker will not start until 6:00 p.m. and be returned to normal operation by 6:00 a.m. (or other pre-determined time) the next day in occupied spaces. In unoccupied spaces speaker work can be done by pre-arrangement with the Property Manager.

(r) **Electromagnetic locking devices (Maglocks)**
Tenant's Contractor(s) will familiarize themselves with the appropriate municipal requirements for the installation of electromagnetic locks.

The following documents must be submitted to the Project Manager for review:

- A copy of the application for a building permit.
- A copy of the building permit issued.

- The original drawings stamped and approved by the City of Toronto giving their approval of the installation of the EMLD's.
- Copies of any letters requesting an exemption.
- A copy of the documents with the City of Toronto's stamp of approval granting an exemption of the regulations.

Provide five (5) business days' advance notice for all Maglock tests including tests by governing Authorities.

Following receipt of the requested documentation, the Building Operations and Security Centre will inspect the installation to ensure that all requirements have been met. The installation must also be approved by the Property Manager's manager of 'Life Safety and Security' before approval is given by the Building Operations and Security Centre.

During testing of the Fire Alarm System, normal operation of the EMLD's as required by the Ontario Building Code must not be affected, and vice-versa. In other words, when one system is being tested the other system must be able to function as intended, i.e. not on by-pass mode.

All final connections and verification of EMLD's that are to be connected to, and released by the Alarm System, must be made by the fire alarm manufacturer after 10:00 p.m. at the Tenant's expense.

III. Mechanical

(a) Cutting & Patching

All cutting and patching required to the existing Building structure for the work shall be included in the contract and be acceptable to the Landlord.

Where conduit pass through fire rated walls or floors, provide fire stopping material listed with and bearing label of CSA and ULC and maintain same fire rating of building component penetration.

Tenant's Contractor(s) will fill holes with concrete after removal of pipes or drains. Large openings shall be closed following review by the Base Building Consultant structural engineer.

Tenant's Contractor(s) will caulk and seal new installations of floor pipes and drains to prevent water leakage and to maintain the fire rating of the assembly penetrated.

(b) Demolition & Restoration

Tenant's Contractor(s) will remove and cap all water supply, drain lines, and vent connections from ceiling spaces back to core riser unless otherwise advised by the Property Manager. Future connections will be provided with a valved and capped connection in conjunction with any tie-in. All tie-ins shall be complete with isolation valves and service designation.

Tenant's Contractor(s) will be responsible for removing any abandoned or unused ductwork or piping at the Tenant's expense.

It is the responsibility of the mechanical contractor to seal any openings through walls or floors to safeguard the fire rating assembly in question.

(c) Work outside the Premises

Work in other Tenant space is to be arranged through the Property Manager. Work shall be carried out after Normal Business Hours only. Security is required at all times, all costs will be at the sole expense of the Tenant.

(d) Air balancing

Tenant's Contractor(s) will hire the approved air balancing company to re-balance the air system upon completion of work and provide a balancing report to the Property Manager. System balancing is subject to the approval of the Property Manager and will be accepted following review and approval by the Base Building Consultant engineer.

(e) Materials/Installation/Servicing

Tenant's Contractor is to install filter medium over pleated filters in compartment units and air handling equipment filters prior to start of the project. During demolition and drywall sanding stages install a temporary filter on return air openings and prevent the migration of dust into all systems and areas of the Building and Building equipment. Remove and dispose of filters at the project conclusion (i.e. clean diffusers, grilles, vents, etc.). Clean air handling equipment and compartment unit and above ceiling air plenums and other areas as required by the Property Manager.

Tenant's Contractor(s) will ensure that piping and ductwork is hung according to acceptable industry standards and to the standards of the Building (i.e. from slab or structure and not from existing piping or ductwork). Contact with ductwork or other piping/conduit is not allowed under any circumstances; all installations must be free from vibration.

Tenant's Contractor(s) will ensure that flexible ducts are secured to rigid ducts by mechanical fasteners and tape or sealant. (Tape alone is NOT acceptable). No joints will be allowed on flexible ducts.

Tenant's Contractor(s) will ensure that no dissimilar metals come in contact with piping and that electrical connectors are used where required.

Kitchen exhaust systems are not to be connected to the sanitary exhaust system. The Tenant's Contractor(s) will ensure that careful consideration is given to the inclusion of ecology units or special ductwork in kitchen exhaust systems.

Both the Tenant and the Tenant's Contractor(s) should give consideration to the provision of sufficient air to interior rooms in order to prevent overheating. Exhaust fans are a minimum requirement. A separate or dedicated air handling equipment box is more effective for Tenant comfort. Tenant's Contractor(s) will ensure that supply piping has shut-off valves and backflow preventers where required by Code (i.e. City water backup and computer A/C units). Provide backflow preventer field tests witnessed by the Property Manager and associated reports prior to placing systems into operation. At no time will Base Building Standard systems be tied into, operated or manipulated in any way without advance written authorization from the Property Manager, including by way of example, opening/closing valves, turning equipment on/off, systems connections, tests.

The Property Manager recommends that supplementary air conditioning units be inspected by the manufacturer's service representative upon installation to ensure proper operation. The Tenant is required to have the equipment inspected and serviced regularly thereafter. The Property Manager will be pleased to arrange for this service at the Tenant's expense. All supplementary air conditioning units shall be installed in accordance with Base Building Standards and governing codes and requirements.

Welding, brazing or soldering or any such activity likely to activate a smoke detector, must be approved by the Property Manager at least forty-eight (48) hours in advance of work, so that adequate precautions may be taken to prevent activation of smoke alarms and for the issuance of a work permit. All such work will be performed after Normal Business Hours. As a safety precaution, a fire extinguisher provided by the Tenant's Contractor shall be available in the immediate vicinity of the work. Upon completion of the work, the Tenant's Contractor(s) must notify the Property Manager.

All requests for air system shutdowns must be submitted in writing to the Property Manager for approval, at least forty-eight (48) hours prior to commencement of work. A Tenant's request for extra air conditioning will take precedence over a Tenant's Contractor(s) request for shutdown. All work will be performed after Normal Business Hours.

All kitchens, serveries and washrooms are to have floor drains installed. All added mechanical spaces must be concrete-curbed, floors water-proofed and floor drains installed. The Landlord reserves the right to have areas relocated during the design phase as not to cause potential damage to sensitive areas adjacent to or below. The Tenant shall be required to add protective devices as applicable (i.e. drains pans, under hot water tanks, with water sensors connected to the BAS, etc.)

Tenant's coffee makers and water coolers shall be connected using copper tubing or piping only. Plastic tubing is not acceptable.

(f) **Sprinklers/ Standpipes**
Tenant's Consultant is to verify that fire hose coverage is code compliant.

Tenant's Contractor(s) will arrange with the Building Operations and Security Centre for shutting off the standpipe system when fire hose cabinets ("FHC") are added or when changes are required to the sprinkler system.

Filling, draining or testing of the sprinkler system must be carried out between the hours of 6:00 p.m. and 6:00 a.m. Monday to Friday or on weekend by special arrangement.

Provide seventy-two (72) hours' advance written notice of all proposed dates for shutdowns or isolation. All drain-downs and fill-ups will be done outside of Normal Business Hours as approved by the Property Manager, weeknights and on weekends. No more than one standpipe will be drained down at a time. Riser systems will not be open for more than ten minutes before it is reconnected or capped off.

(g) **Metering**
Provision must be made for the inclusion of a water check meter, reading in cubic meters (m^3) for large volume uses (e.g. computer rooms, kitchens).

SECTION 5 – LEED GUIDELINES

5.1 LEED GUIDELINES

For the benefit of those tenants who may choose to pursue a LEED Commercial Interior (LEED-CI) certification for their premises, the Landlord will provide on request where available, a copy of the LEED-CI screening and documentation survey that will identify the potential credits which may be applied to a tenant's application for certification.

SECTION 6 – BUILDING CHARGES & LANDLORD SERVICES

6.1 BUILDING CHARGES & LANDLORD SERVICES

Tenant shall pay the following to the Landlord with respect to services ("Services") which the Landlord performs in connection with the Tenant's Work and any other obligation of the Tenant relating to this Manual:

(a) the total costs and expenses (collectively, the "Costs") incurred or paid by the Landlord in connection with the Services including, without limitation, the following:

(i) costs for all personnel (including, without limitation, salaries, wages and benefits and related contributions, taxes or assessments and travel and subsistence expenses);

(ii) the cost of all products, utilities, tools and equipment including, without limitation, the cost of transportation, installation, repair, maintenance and storage thereof and such services as fire protection, light, heat, water, power, security, legal costs, auditing, special supervision, hoisting and other vertical transportation for workmen and materials, construction garbage removal, life safety services and any other special services, the cost of which can be reasonably allocated to the Services;

(iii) the amounts of all contracts with contractors, consultants and suppliers and the costs that result from any contractor's, consultant's or supplier's failure to perform. Without limiting the generality of the foregoing, if the Tenant's Consultant is not a Base Building Consultant, the costs and expense of consultants retained by the Landlord to check and review such Tenant's Consultant's drawings and specifications and inspect the site;

(iv) charges levied by Authorities;

(v) all taxes and duties related to the Services;

(vi) charges for long distance telephone and facsimile communications, reproduction and courier services including, without limitation, printing as-built drawings requested or required by the Tenant or the Tenant's Consultants; and

(vii) costs incurred due to emergencies affecting the safety of persons or property.

For greater certainty, certain components of the Costs shall be based on the applicable rates set out in Sections 7.5; and

(b) an administrative fee of fifteen percent (15%) of the Costs ("Fee").

6.2 INVOICING OF SERVICES

The Landlord may submit invoices to the Tenant on a monthly basis. Each invoice shall be for the Costs incurred or paid to date during the payment period, the applicable Fee related to such Costs and the applicable taxes. The amounts set out in the invoice submitted by the Landlord shall be paid by the Tenant within thirty (30) days after submittal of the invoice to the Tenant. The Tenant shall pay interest at a rate of one and a half percent (1.5%) per month (eighteen percent (18%) per annum), calculated monthly, on any amount for which the Landlord has issued an invoice and the Tenant has failed to pay within the required thirty (30) day period.

6.3 TERMS & CONDITIONS OF SERVICES

Any work, equipment or services provided by the Landlord at the written request of the Tenant shall be authorized in writing by the Tenant in the form provided by the Landlord and shall be paid by the Tenant as follows:

(a) Thirty-five percent (35%) of the amount payable by the Tenant as estimated by the Landlord, shall be paid to the Landlord by the Tenant at the time the Tenant authorizes the provision of such work, equipment or services by the Landlord.

(b) The Tenant shall pay the balance of the amount payable by the Tenant for such work, equipment or services forthwith upon receipt of monthly Landlord's invoices which shall be issued in conjunction with the progress of the provision of such work, equipment or services work.

SECTION 7 –CONSULTANTS, CONTRACTORS & BUILDING INFORMATION

7.1 BUILDING INFORMATION

Owner/ Landlord		**Brookfield Office Properties Inc.**
		c/o Brookfield Properties Canada Management LP
	Address:	Brookfield Place 181 Bay Street, Suite 700 Toronto, Ontario M5J 2T3
Property Manager		**Brookfield Properties Canada Management LP**
	Address:	130 King Street West, Suite 2110 P.O Box 2 Toronto, Ontario M5X 1A9
	Contact:	**Alissa Rankin, Property Manager**
	Contact Number:	Tel: 416.864.6214
	Email:	Alissa.Rankin@cbre.com
	Contact:	**Sarah McDonald, Assistant Property Manager**
	Contact Number:	Tel: 416.862.6175
	Email:	Sarah.Mcdonald1@cbre.com
Project Manager		**Brookfield Properties Canada Management LP**
	Address:	Brookfield Place 181 Bay Street, Suite 700 Toronto, Ontario M5J 2T3
	Contact:	**James Elliott, Director, Construction Services**
	Contact Number:	Tel: 416.369.4909
	Email:	james.elliott@brookfieldproperties.com
	Contact:	**Aziz Lakdawala, Senior Project Manager, Construction Services**
	Contact Number:	Tel: 647.677.5786
	Email:	aziz.lakdawala@brookfieldproperties.com
	Contact:	**Walter Wang, Project Manager, Construction Services**
	Contact Number:	416.369.2609
	Email:	walter.wang2@brookfieldproperties.com
Building Operations: Electrical/ Mechanical		**Brookfield Properties Canada Management LP**
	Address:	105 Adelaide Street West, Suite 101 Toronto, Ontario M5H 1P9
	Contact:	**Jun Concha, Manager, Operations**
	Contact Number:	Tel: 416.864.6219
	Email:	Jun.ConchaJr@cbre.com

Contact:	**Omar Soltan, Senior Building Operator**
Contact Number:	Tel: 416.368.1533
Email:	Omar.Soltan@cbre.com

Security:

	Brookfield Properties Canada Management LP
Address:	105 Adelaide Street West, Suite 101 Toronto, Ontario M5H 1P9
Contact:	**Ryan Chisholm, Manager, Security & Life Safety**
Contact Number:	Tel: 647.206.4372
Email:	Ryan.Chisholm@cbre.com

CONSULTANTS, CONTRACTORS & BUIDLING INFORMATION

7.2 BASE BUILDING CONSULTANTS

Architects:

Bregman & Hamann
Contact: **Paul Gogan**
Address: 481 University Avenue
Suite 300
Toronto, Ontario
M5G 2H4
Telephone: 416.596.2299 ext. 5155

Electrical Consultants:

Mulvey & Banani International Inc.
Contact: **Kevin Pattison**
Email: kpattison@mbii.com
Address: 90 Sheppard Ave. E., Suite 500
Toronto, Ontario
M2N 3A1
Telephone: 416.751.2122 ext. 281

Mechanical Consultants:

The Aquila Group
Contact: **Jorge Osorio**
Address: 40 University Avenue
Suite 1300
Toronto, Ontario
M5J 1T1
Telephone: 416.340.1937 ext. 252
Email: josorio@theaquilagroup.com

Structural Engineers:

Stephenson Engineering, a company of Salas O'Brien
Contact: **Peter McAteer**
Email: peter.mcateer@salasobrien.com
Address: 2550 Victoria Park Avenue
Suite 602
Toronto, ON M2J 5A9
Telephone: 416.635.9970

Code Consultants:

LRI Engineering Inc.
Address: 170 University Avenue
3rd Floor – Box 1
Toronto, Ontario
M5H 3B3
Telephone: 416.515.9331

7.3 APPROVED CONTRACTORS

MECHANICAL	**Bird Mechanical**	T: 905.954.1020
	Multi-Tech Trades Corp.	T: 905.812.7900
	Modern Niagara	T: 416.360.1617
	Opus Mechanical	T: 416.312.4500
	Raylyn Contracting Inc.	T: 905.683.5119
ELECTRICAL	**Ampere Limited**	T: 416.661.3330
	Campbell & Kennedy Electric Ltd.	T: 416.252.7703
	CMS Electrical Group	T: 416.609.9992
	Plan Group	T: 416.522.5930
	Guild Electric Ltd.	T: 416.288.8222
	Smith and Long	T: 416.391.0443
	Symtech Innovations	T: 905.940.8044
FIRE ALARMS/ LIFE SAFETY	**Plan Group**	T: 437.535.5534 (Rui Pereira) firealarmservice@plan-group.com
	Tyco Simplex Grinnell	T: 905.212.4641
	JD Collins	T: 905.660.4535
SPRINKLERS	**Modern Niagara**	T: 416.360.1617
	Vipond Automatic Sprinklers	T: 416.335.1855
	Onyx – Sprinkler Installations Inc.	T: 416.674.5633
	Guardian Fire Systems	T: 905.567.4911
	Tyco Simplex Grinnell	T: 905.212.4600
CONTROLS	**Ainsworth Controls**	T: 905.779.3540
CLEANING	**Bee Clean**	T: 416.410.6181
AIR BALANCING	**Design Test & Balance Co.**	T: 905.886.6513
	Dass Enterprises	T: 905.238.3377
ROOFING	**Bothwell Accurate**	T: 416.762.8243
LOCKSMITH	**Protek Locksmiths**	T: 416.931.1943
X-RAYING & CORE DRILLING	**Canadian Cutting & Coring**	T: 905.624.1414
	C.B. Cutting & Coring	T: 905.836.1220
	Graff Concrete Cutting	T: 905.457.8120
ELEVATORS	**For any elevator related work, call the Property Manager**	
SECURITY SYSTEMS (CARD ACCESS)	**Securitas Electronic Security** Contact: Justin Milburn	T: 416.951.9178
BASE BUILDING CEILING TILES/TBAR	**Select Acoustic Supply Inc.**	T: 416.743.7545

UTILITY SUB-METERING	**Ainsworth Electric** Contact: Anthony Kramarits – anthony_kramarits@ainsworth.com	T: 416.667.6084
FIRE PROOFING	**Donalco Inc.** **Reno Firestoppers** **Pro Firestop**	T: 416.292.7118 T: 289.251.3047 T: 416.293.0993

7.4 LEGAL DESCRIPTION OF THE DEVELOPMENT LANDS

PIN 21405-0012(LT)

Parcel 12-1 Leasehold, Section 66M2164

Part of Lot 12, Plan 66M2164, City of Toronto designated as Parts 1 and 3 on Plan 66R13864 and Parts 1, 2 and 3 on Plan 66R14141 SAVE AND EXCEPT Part 1 on Plan 66R15958.

The southerly limit of Adelaide Street West has been confirmed by Plan BA1121 under the *Boundaries Act* registered as Plan D464, Instrument No. A677934.

TOGETHER WITH a non-exclusive easement, right-of-way or right in the nature of an easement over part of Lots 6 and 7, Plan 66M2164 designated as Parts 9, 10, 21, 22 and 30 on Plan 66R14112 to permit the unobstructed passage of light and air as set out in Instrument No. C177137.

TOGETHER WITH a non-exclusive easement, right-of-way or right in the nature of an easement over part of Lots 6 and 7, Plan 66M2164 designated as Parts 9, 10, 21, 22, 30 and 31 on Plan 66R14112 for the purpose of maintaining, repairing and reconstructing the North American Building as set out in Instrument No. C177137.

TOGETHER WITH a non-exclusive easement, right-of-way or right in the nature of an easement over part of Lot 6, Plan 66M2164 designated as Part 10 on Plan 66R14112 in common with all other persons entitled thereto, for ingress to and egress from an entrance or doorway located at ground level in the westerly wall of the North American Building as set out in Instrument No. C177137.

TOGETHER WITH an exclusive easement, right-of-way or right in the nature of an easement over part of Lot 6, Plan 66M2164 designated as Part 1 on Plan 66R14143 to maintain, repair and replace the existing two six-inch water lines as set out in Instrument No. C177137.

TOGETHER WITH a non-exclusive easement, right-of-way or right in the nature of an easement over part of Lot 12, Plan 66M2164 designated as Parts 1, 2, 3, 4, 5, 6, 7, 8, 11, 12, 13, 14, 15, 16, 17, 19, 20, 23, 24, 25, 26, 27, 28, 29, 33, 34, 35, 36, 37, 38, 39, 40 and 41 on Plan 66R14112 for the purpose of maintaining, repairing and reconstructing the North American Building as set out in Instrument No. C177138.

TOGETHER WITH a non-exclusive easement, right-of-way or right in the nature of an easement over part of Lot 12, Plan 66M2164 designated as Parts 1 and 2 on Plan 66R14142 for ingress to and egress from the rear of the North American Building at the ground level as set out in Instrument No. C177138.

TOGETHER WITH an exclusive easement, right-of-way or right in the nature of an easement over part of Lot 12, Plan 66M2164 designated as Parts 1, 2 and 3 on Plan 66R14142 in common with all other persons entitled thereto for use as a fire escape or exit as set out in Instrument No. C177138.

CONSULTANTS, CONTRACTORS & BUIDLING INFORMATION

7.5 COST OF BASE BUILDING SERVICES

WORK	COST	UNIT	SCHEDULING	ADVANCE NOTICE
Light Duty Cleaner	$25.00	hr.	regular	24 hours
			after hours	
Heavy Duty Cleaner	$25.00	hr.	regular	24 hours
			after hours	
Post-construction clean <5000 sq. ft. >5000 sq. ft.	 $0.15 $0.12	 sq.ft. sq.ft.		48 hours
Washroom cleanup	$50.00	day	Daily	24 hours
Security supervision (4 hour minimum charge)	$30.00	hr.	Schedule in advance	48 hours
Material hoist / Freight elevator use after 6pm week-days and weekends	$25.00	hr.	Schedule in advance	1 week
Fire Watch/Shutdown	$45.00	hr.	Schedule in advance	48 hours
Sprinkler/standpipe draindowns	$45.00	hr.	Schedule in advance	1 week
Electrical shutdowns	$45.00	hr.	Schedule in advance	1 week
Mechanical shutdowns	$45.00	hr.	Schedule in advance	1 week
Garbage bins	*See note below	hr.	-	72 hours
HVAC after regular hours	$35.00	hr.	-	24 hours
Water	By meter	-	-	-
Loading Dock (4 hour minimum charge)	$47.00	hr.		1 week

NOTES

- Construction garbage removal costs will be based on material hoist/elevator costs per hour. Tenant's Contractor is to provide own bin through arrangements with FCP loading docks.
- Regular hours are from 7:30 a.m. to 6:00 p.m. Monday to Friday.
- Above services are available for a minimum for 4 hours per occurrence.

- Prices may be adjusted to reflect actual costs at time of Tenant's construction.

7.6 SAFE WORK PERMIT

A Safe Work Permit form must be filled out in person at the Control Centre for 105 Adelaide Street West. Fax or email copies will not be accepted. A sample copy of the form is contained in Section 10 – Forms of this Manual.

CONSULTANTS, CONTRACTORS & BUIDLING INFORMATION

SECTION 8 - BUILDING DESIGN PARAMETERS

8.1 OFFICE

(A) BUILDING DATA SHEETS

Building Name	**Northbridge Place**
Location	**105 Adelaide Street West, Toronto**
Building Operating Hours	**Hours of Operations:** Northbridge Place business hours (as defined in the Lease) are: **Monday through Friday: 7:00 a.m. to 6:00 p.m.** **Saturday: Restricted Access (pass cards only)** **Sunday: Restricted Access (pass cards only)** **Statutory Holidays: Restricted Access (pass cards only)** Where applicable, the Lease takes precedence. Tenants may operate their own extended hours, subject to security access regulations for the Building. Extended hours are subject to additional service costs. **Northbridge Pace Public Access Hours** Northbridge Place is accessible twenty-four hours a day, seven days a week. For your convenience Northbridge Place essential services observe the following hours of operation. Service — Hours of Operation Engineering — 24 hours – 7 days/week Housekeeping — 24 hours – Monday to Friday Parking — 24 hours – 7 days/week Security — 24 hours – 7 days/week Loading Dock — Monday 7:00 a.m. to Friday 6:00 p.m. Deliveries after 6:00 p.m. on Saturday, Sunday and Holidays must be booked 24 hours in advance Courier — 8:00 a.m. to 5:00 p.m. – Monday to Friday
GENERAL DESCRIPTION	
	105 Adelaide Street West, also known as Northbridge Place, is a 12-storey office property located in the financial core between the Exchange Tower and First Canadian Place. This Class 'A' Building was completely renovated in 1990.
PHYSICAL PROPERTIES	
Completion Date	Built 1962, renovated in 1990
Total Rentable Area	173,000 sq.ft. office (typical floor plate 18,100 sq.ft.) 11,000 sq.ft. retail
Storeys	12 storeys above grade 3 storeys below grade
Building Height	152 feet
Floor Loading	Floors 2, 3, 4, 5, 7, 8, 9, 10 total live load of 50lbs/sf plus a partition load of 25lbs/sf Ground & 6th floor total live load of 100lbs/sf plus a partition load of 25lbs/sf 11th floor total live load of 50lbs/sf plus a partition load of 30lbs/sf 12th floor total live load of 80lbs/sf plus a partition load of 35lbs/sf Concourse total live load of 125lbs/sf plus a partition load of 25lbs/sf

Building Name	**Northbridge Place**
Location	**105 Adelaide Street West, Toronto**
	Sub-basement total live load of 125lbs/sf plus a superimposed dead load of 25lbs/sf
Exterior Cladding	The façade of the Building is a combination of glazed curtain wall and natural stone panels. The natural stone consists mainly of granite, with limestone bands at each floor level. The curtain wall portions of the Building cladding have double glazed window units and glazed spandrel panels.
Windows	Silver anodized window frames and tinted reflective double glazed sealed window units. Mechanical fastening to window frames and/or mullions is not permitted.
Window Coverings	See through Mecho™ roll shade window coverings are provided by the Landlord as a Base Building Standard window treatment and are not to be removed.
Restrooms/Floor	Men's and women's; typical floor has 4 fixtures per washroom.
FINISHES	**Building Standard**
Walls	Core walls, exterior walls and columns are prime painted drywall. On multi-tenant floors the public corridors will have vinyl wall covering to Base Building Standard.
Floors	A smooth concrete floor, ready to receive Tenant's floor coverings. The Landlord will provide carpet in corridors and elevator lobbies on multi-tenant floors.
Ceiling	The suspended ceiling consists of a 20" x 60"' narrow line grid system with Armstrong BP 797B perforated, 5/8" thick regular edge, lay-in acoustical panels. Ceiling height is +/- 8'-9" on typical floors (2-9) and +/- 20' on the ground floor. It shall be the Tenant's responsibility to remove and re-install any panels as may be necessary for the completion of the Tenant's Work. The panels removed during the course of construction are to be stored within the Premises for reuse or later disposal. Replacement of any panels damaged during the course of removal, storage and replacement shall be the responsibility of the Tenant.
Doors	*Doors and Frames* Suite entry doors on multi-tenant floors will be single full height solid core stained hardwood veneer; frame stained to match. Double doors will be provided on multi-tenant floors opposite the elevator lobby entrances only. All Base Building Standard entrance doors on multi-tenant floors will be provided by the Landlord as per Applicable Laws. Glass sidelights are optional at Tenant's expense. Entrances designed by the Tenant and approved by the Landlord will be installed by the Tenant at the Tenant's expense. *Hardware:* Standard Tenant hardware is Sargent LA series, C32D finish. Cylinders must be Sargent "LA" keyway. The Landlord will supply cylindrical locks on multi-tenant floor suite entrances. All locks and cylinders installed by Tenants on perimeter, as well as interior doors must be Sargent locks subject to the building master key system. The system, while allowing complete freedom for the Tenant regarding the locking arrangements for its offices, provides access to each office at all times for both normal cleaning and emergency situations. Locks and cylinders will be supplied by the Tenant's hardware supplier to the Landlord's Locksmith who will do the keying as in accordance with the

Building Name	Northbridge Place
Location	105 Adelaide Street West, Toronto
	Tenant's instructions at the Tenant's expense. Door closures shall be LCH Ingersol Rand. Hinges are Hager 4" x 4". All hardware is to be stainless steel finish. **Note:** Outside locksmiths or lock manufacturers are not permitted to change the keying of any locks.
Elevator Lobbies	Elevator lobbies have a painted drywall ceiling with recessed valence lighting, walls are prime painted drywall. Floors are rough concrete. Elevator doors and frames are painted stainless steel. Full floor tenants have the option at their cost, to have the Landlord's contractors install typical multi-tenant floor and elevator frame finishes in the elevator lobby.
SIGNAGE	
	Suite signage will be in accordance with the standards established for the project at the Tenant's expense. Directory board signage will be provided by the Landlord at the Landlord's expense. Tenant suite signs consist of an engraved name plate with the Tenant name centered on the top and the suite number centered on the bottom. No other suite identification or sign is permitted outside the Premises. All requested for signs must be submitted in writing to the property management office indicating the exact wording and spelling required. Requests should be submitted approximately one month prior to the actual move-in date.
LIFE SAFETY	
Monitoring	The Simplex 4100 series fire alarm system is connected to off-site monitoring and is located adjacent to the main lobby in the life safety room. The system is dedicated to the office tower, and is tied into First Canadian Place and the Exchange Tower as the buildings are tied together in the ground floor concourse and the shared parking garage.
Sprinklers	Each floor is provided with fire hose cabinets, fire extinguishers and an automatic sprinkler system. The sprinkler heads are exposed quartzoid bulb type.
Fire Detection Services	The placement of Tenant partitions can affect the sprinkler and fire hose coverage, and the cost of any modifications to such system shall be the responsibility of the Tenant.
Smoke Evacuation	Fully automated smoke control system with firefighter override capabilities.
Fire Hose Cabinets	Two per floor, with additional cabinets to suit Tenant Premises configuration, at the Tenant's cost. Two 3" capped connections are provided on each floor adjacent to the core fire hose cabinets.
Emergency Exits	Two evacuation stairs are provided with cross-over floors at the 3rd floor, 8th floor and 10th floor levels
Emergency Voice Communication	EVAC speakers for communicating with Building occupants in emergency situations are located throughout the complex to meet the requirements of Applicable Laws.
Firefighters' Elevator	All passenger elevators are equipped with automatic Phase I emergency recall and Phase II (in car) controls. The freight elevator is the designated fire fighters elevator as it is located in a segregated shaft.
ELEVATORS	

Building Name	Northbridge Place
Location	105 Adelaide Street West, Toronto
	The passenger elevators are not to be used for the movement of materials, tools or supplies.
FREIGHT HANDLING	
Loading Dock Entrance	The loading dock for 105 Adelaide is located off Adelaide Street and is managed by First Canadian Place. Passenger elevators are designed solely for transporting Building tenants and their visitors. For this reason, all deliveries must be transported via 105 Adelaide's freight elevator.
Clearance	13' (Height) 40' (length) 13' (width)
Hours of Operation	7:00 a.m. - 6:00 p.m., Monday – Friday Regular hours for small deliveries throughout the day are between 15 – 20 minutes. No booking required. vehicles must wait their turn at the entrance of the Loading Dock.
Freight Elevators	One freight elevator is available for service from level SB to the 10th floor and inside dimensions of 70" W x 80" D x 113" high ceiling. The door of the freight elevator is 48" W x 84" H. Shuttle elevator #7 accesses floors 11 and 12. Interior dimensions are 80" W x 65" D x 55" high. The door to the shuttle elevator is 42" W x 84" H.
HEATING, VENTILATION AND AIR CONDITIONING	
HVAC	Conditioned air is supplied to the leased premises on each floor by means of on-floor Variable Air Volume units which deliver air to terminal units. The terminal units supply air to perimeter slot diffusers and interior zone square diffusers. Each perimeter V.A.V. box serves a 20' bay and potential corner office. The perimeter V.A.V. boxes in conjunction with floor level perimeter hot water radiation will provide sequence controlled heating and cooling to the perimeter. The interior zone has 28 terminal units, individually controlled, supplying cooling only. Central humidification is provided via the air handling system for winter humidification. Return for both interior and perimeter zones are taken through light fixture openings to the ceiling space which acts as a return air plenum. Air transfer grilles must be installed in all sound baffles above the ceiling. Air balancing must be completed by the Landlord's Approved Contractor at the Tenant's expense. Any designer requiring a change in numbers or the deletion of Base Building Standard light fixtures used for return air, must provide adequate return air openings by other means.
Fresh Air	The Building's HVAC systems are designed to meet or exceed ASHRAE and Applicable Laws. Fresh air is introduced to the Building via the central air handling system. A minimum of 25% of fresh air flow is maintained for comfort. Ventilation standard is 25 cubic feet per minute (the assumed occupancy is one person per 150 square feet).
Temperature Control Zones	Computerized state-of-the-art digital control and monitoring system performs environmental control and energy management functions for

Building Name	**Northbridge Place**
Location	**105 Adelaide Street West, Toronto**
	all major mechanical systems providing the Building occupants with comfortable, reliable and energy efficient operation. Each V.A.V box is equipped with a pneumatic type thermostat piped to the V.A.V. controller. Modifications to controls must be completed and set by the Building's Approved Contractor at the Tenant's expense.
System Design Conditions	***Winter*** 22 degrees Celsius with 30% relative humidity at outside conditions of minus 20.5 degrees Celsius. ***Summer*** 24 degrees Celsius with 50% relative humidity at outside conditions of 32 degrees Celsius dry bulb and 24.5 degrees Celsius wet bulb temperature.
Supplemental Services	Supplemental HVAC is available 24 hours a day. Tie in to this system must be approved by the Landlord.
PLUMBING	
Plumbing & Drainage	Building standard men's and women's washrooms with full handicap access are provided on each floor. Tepid water is supplied to the washrooms. In order to provide maximum flexibility for adding private washrooms and kitchen stations, additional sanitary drains, sanitary vents, domestic water and sanitary exhaust capped connections are provided by the Landlord at the core. Extensions of these services to suit specific Tenant needs are at the Tenant's expense. Check meters will be required on all domestic water lines. Water heaters, if required, are at the Tenant's expense. All plumbing floor penetrations made by the Tenant must be sealed as per Base Building Standard detail. Areas prone to water leakage are to be waterproofed prior to the installation of floor coverings. Where plumbing is removed from the Tenant's Premises, all water supply, drain lines, and vent connections must be removed from the ceiling spaces back to the core riser and properly capped.
ELECTRICAL SYSTEMS	
Lighting	General office lighting consists of 20" x 60" recessed fixtures with two 28 watt T8 x 4' white fluorescent lamps, and an acrylic lens. The standard lighting pattern will provide an average lighting level of 55 foot candles at desk level. Lighting power is provided at 110 volts supplied to the plug in type fixtures. Power consumption is 4 watts per square foot. Switching is low voltage. Control is from an on floor distribution panel. Note: All under slab wiring in the ceiling space of the floor below must be in conduit. All boxes must be marked, clearly indicating that they belong to the electrical system on the floor above.
Emergency Power	A single 334 KVA, diesel-driven standby generator is capable of serving all emergency lighting and life safety systems in the event of

Building Name	Northbridge Place
Location	105 Adelaide Street West, Toronto
	a power failure. Domestic water pumps are also fed from the emergency power system. The diesel room day tank capacity is 60 gallons. A 600/347 volt panel is provided for every five floors, with 15kva (typical) transformers provided to step down the emergency power to 208/120 volt for the circuit panels provided for emergency loads.
COMMUNICATION FACILITIES	
Telephone	The telephone and electrical rooms, which are provided on each floor, are intended only for Base Standard Building communications and electrical services, and are not accessible to the Tenant. Any space of this nature, which the Tenant requires for its own equipment or use, must be provided within their Premises. The Tenant shall carry out arrangements for telephone and communications services directly with the system supplier. Under no condition shall these rooms be used for storage of materials. Fire proofing through floor slab openings is required and shall conform to building standard detail. All wiring in the ceiling (e.g. telephone and data communication lines) must be completely enclosed in conduit or it must be FT6 fire rated plenum cable, properly bundled and suspended.
Fiber Optics	There are a number of providers located within the Building giving tenants a wide variety of options. The following service providers have a presence in the Building: Beanfield, Bell Canada, Telus and Zayo.
Satellite Telecommunications Capability	Can be individually assessed when requested. Space exists to provide necessary routing of signal cable.
Cable Television	Rogers Communications operates a CATV system throughout the Building for the benefit of interested tenants. Hubs are strategically located for ease of setup and connection. Tenants are encouraged to contact Rogers directly for available packages.

HARDWARE SPECIFICATIONS

Standard Tenant hardware is Sargent LA series, C32D finsh. Cylinders must be Sargent “LA” keyway. The Landlord will supply cylindrical locks on multi-tenant floor suite entrances. All locks and cylinders installed by tenants on perimeter, as well as interior doors must be Sargent locks subject to the Building master key system.

The system, while allowing complete freedom for the Tenant regarding the locking arrangements for its offices, provides access to each office at all times for both normal cleaning and emergency situations. Locks and cylinders will be supplied by the Tenant’s hardware supplier to the Landlord’s Locksmith who will do the keying as in accordance with the Tenant’s instructions at the Tenant’s expense.

Door closures shall be LCH Ingersol Rand. Hinges are Hager 4”x4”. All hardware is to be C32D stainless steel finish.

Note: Outside locksmiths or lock manufacturers are not permitted to change the keying of any locks.

(B) METERING:

Electrical:

Meters:

- Approved Meters:

  PowerLogic ION 6200 electricity meters manufactured by Schneider Electric are the Base Building Standard meters that must be installed to meter 100% of each tenant's load consumption that includes the following:

  a) Lighting – Base Building Standard Fixtures
  b) HVAC – Compartment Fans
  c) General Power – Plug power, supplementary HVAC
     Non standard lighting

- Full Floor Tenancies:

  Lighting and HVAC electrical meters have been installed on each floor to meter the consumption of each respective load.

  General Power Loads are required to be metered. Existing meters previously installed for these loads will be made available to the Tenant; provided the meter is compatible to the new load requirements. The Tenant will be required to purchase additional meters should the meters in place are either not compatible with the loads or additional meters are required to meter any other additional load requirements.

  The tenants will be billed the cost of electricity consumed for all electricity loads based on the consumption (in kilowatt hours) record by the meters and applicable electricity rates levied by the local utility.

- Multi Floor Tenancies:

  The tenants occupying space on a multi-tenanted floor will be required to meter general power (plug load), supplementary HVAC and non standard lighting loads. Floor lighting and HVAC loads are metered by the Base Building Standard meters that have been installed.

  The tenants will be billed the cost of electricity consumed within their respective premises which will include general power loads and their proportionate share of the Base Building Standard lighting and HVAC floor meters.

Meter Costs and Installation

- The Tenant shall be responsible for the cost to supply and install any new meters
- The Tenant shall also be responsible for re-commissioning any existing meters that the Tenant's loads are tied into.
- Each new meter will be supplied and installed by Landlord's preferred electrical contractor, Ainsworth Electric Co. Limited (416) 751-4420.
- The Base Building Consultant will review the electrical drawings and identify the metering requirements.
- The subcontractor bidding the electrical installation will include the cost for new meters and re-commission charges for existing meters in the electrical price submission to the general contractor. Contact Ainsworth Electric (416) 751-4420 for quote at time of tendering.
- The electrical subcontractor awarded the work will provide Ainsworth Electric with a purchase order for the complete supply and installation of the metering scope of work.
- The standard meter installation will take place during Normal Business Hours, installed during the construction build-out process. Installations required to be completed outside Normal Business Hours with monitoring loads greater than 200 amps and are not being installed in the core electrical room beside the source, should be priced on a per diem basis with Ainsworth Electric.

SECTION 9 – TYPICAL STANDARD DETAILS

TABLE OF CONTENTS

1. SK-1 – DEMISING PARTITION 63
2. SK-2 – TYPICAL INTERIOR PARTITION 64
3. SK-4 – TEMPERED GLASS ENTRY DOOR 65
4. SK-5 – SUITE ENTRY DOOR JAMB 66
5. SK-6 – EXIT DOOR 67
6. SK-7 – EXIT DOOR JAMB 68
7. SK-8 – 1 HR RATED PARTITION FULL HEIGHT 69
8. SK-9 – PARTITION AT EXTERIOR COLUMN 70
9. SK-10 – TYPICAL FLOOR MONUMENT 71
10. SK-11 – TYPICAL FLOOR DRAIN 72
11. SK-12 – FIRE RATED SLEEVE 73
12. SK-13 – CONVECTOR ACOUSTIC BAFFLE 74
13. SK-14 – GLASS ENTRY DOOR OPTION 1 75
14. SK-15 – GLASS SUITE ENTRY DOORS OPTION 2 76
15. SK-16 – GLASS SINGLE DOOR 77
16. SK-17 – WOOD VENEER SINGLE DOOR 78
17. SK-18 – WOOD VANEER DOUBLE DOORS 79
18. SK-19 – WOOD DOOR & SIDELITE 80
19. SK-20 – TYPICAL GLAZED PARTITION 81
20. SK-21 – HOT WATER TANK 82

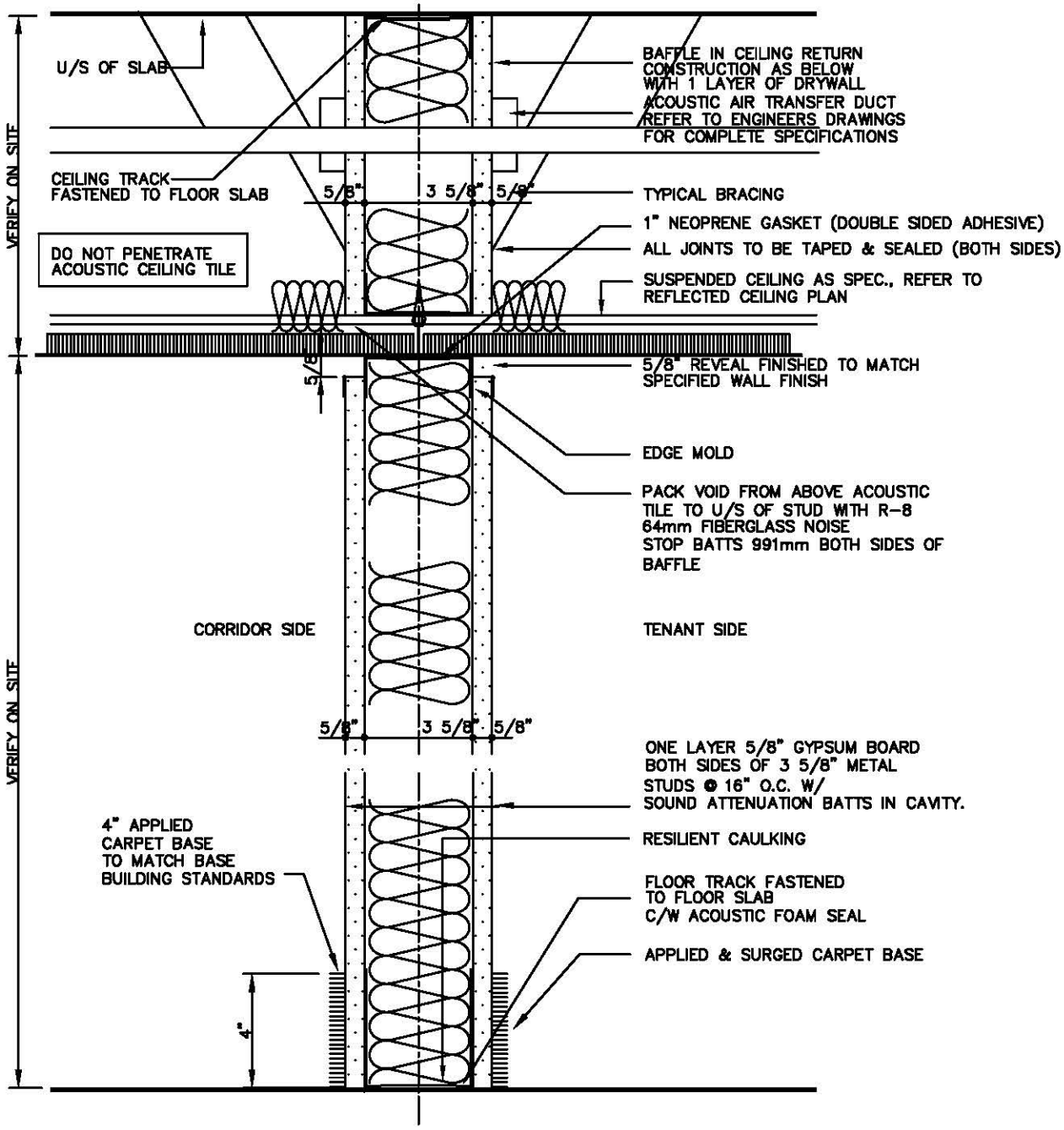

Brookfield

These drawings are issued as part of landlord design criteria only. It is the tenants responsibility to apply these details in compliance with all applicable codes and regulations.

PROJECT 105 Adelaide Street West, Toronto, Ontario	PROJECT NO.: DATE: June 2011 DRAWN BY: SCALE: 1 : 5
DRAWING TITLE SECTION : DEMISING PARTITION	DWG: SK-1

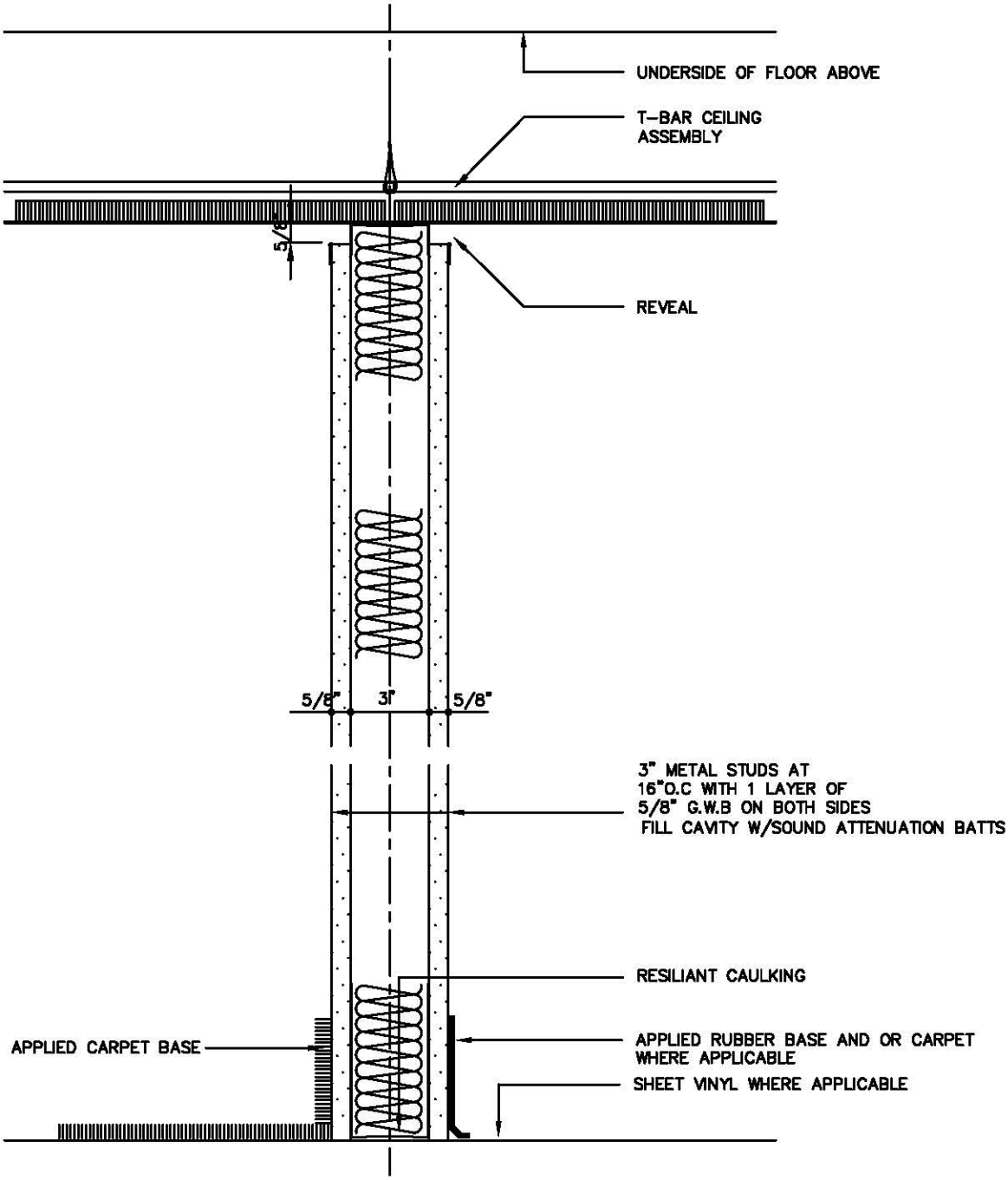

Brookfield

These drawings are issued as part of landlord design criteria only. It is the tenants responsibility to apply these details in compliance with all applicable codes and regulations.

PROJECT 105 Adelaide Street West, Toronto, Ontario	PROJECT NO.: DATE: June 2011 DRAWN BY: SCALE: 1 : 5
DRAWING TITLE SECTION : TYPICAL INTERIOR PARTITION	DWG: SK-2

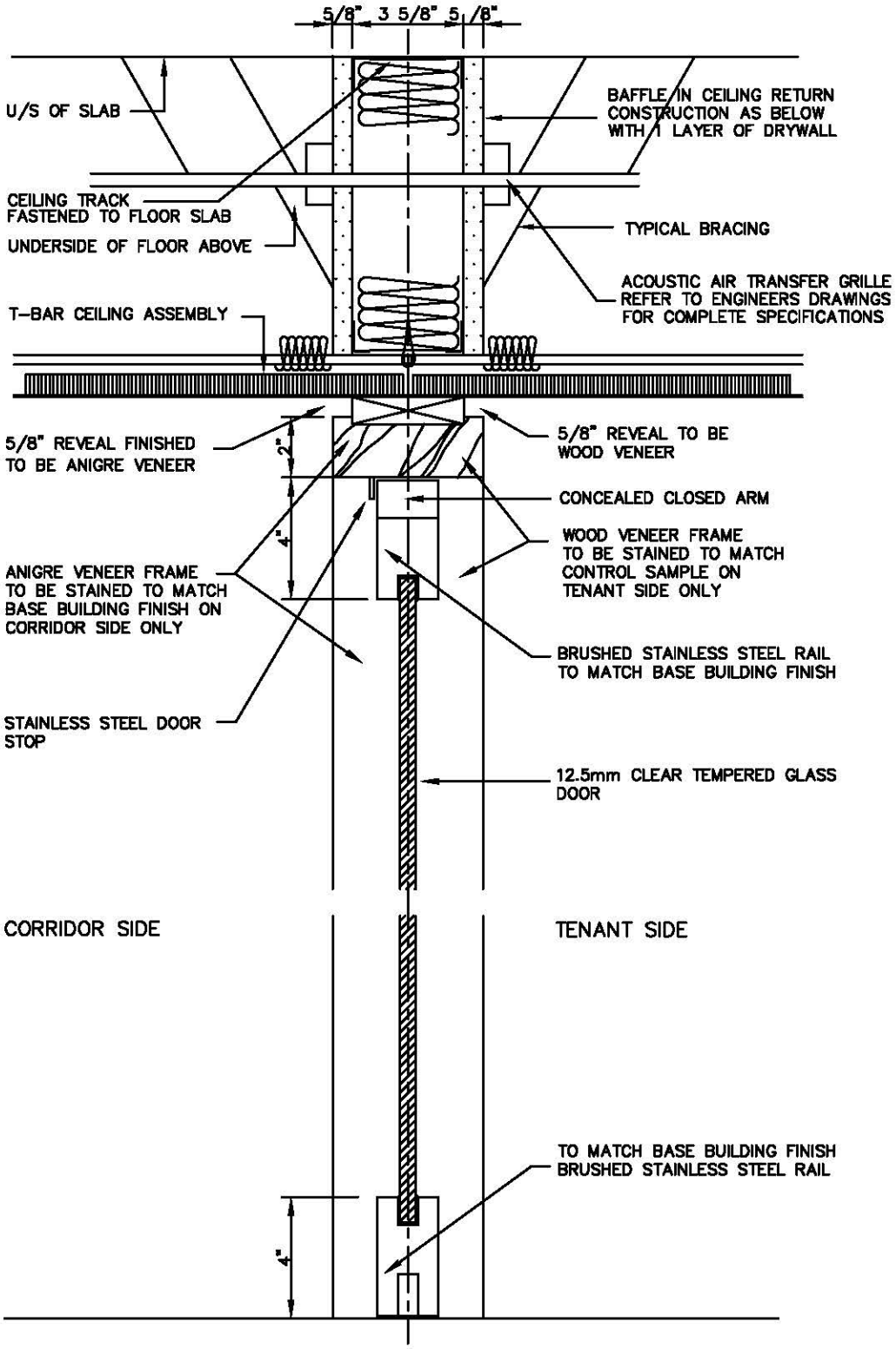

Brookfield

These drawings are issued as part of landlord design criteria only. It is the tenants responsibility to apply these details in compliance with all applicable codes and regulations.

PROJECT 105 Adelaide Street West, Toronto, Ontario	PROJECT NO.: DATE: June 2011 DRAWN BY: SCALE: 1 : 5
DRAWING TITLE SECTION : TEMPERED GLASS ENTRY DOOR	DWG: SK-4

NOTE:

1. FRAME TO BE FINISHED W/ ANIGRE VENEER STAINED TO MATCH BASE BUILDING STANDARDS ON CORRIDOR SIDE
2. COMMON CORRIDOR DOORS & FRAMES SUPPLIED & INSTALLED BY CONTRACTOR, MANUFACTURED AS SPECIFIED BY BROOKFIELD, REFER TO BASE BUILDING SPECIFICATIONS.
3. TENANT SIDE FRAME TO BE FINISHED W/ VENEER TO MATCH CONTROL SAMPLE.

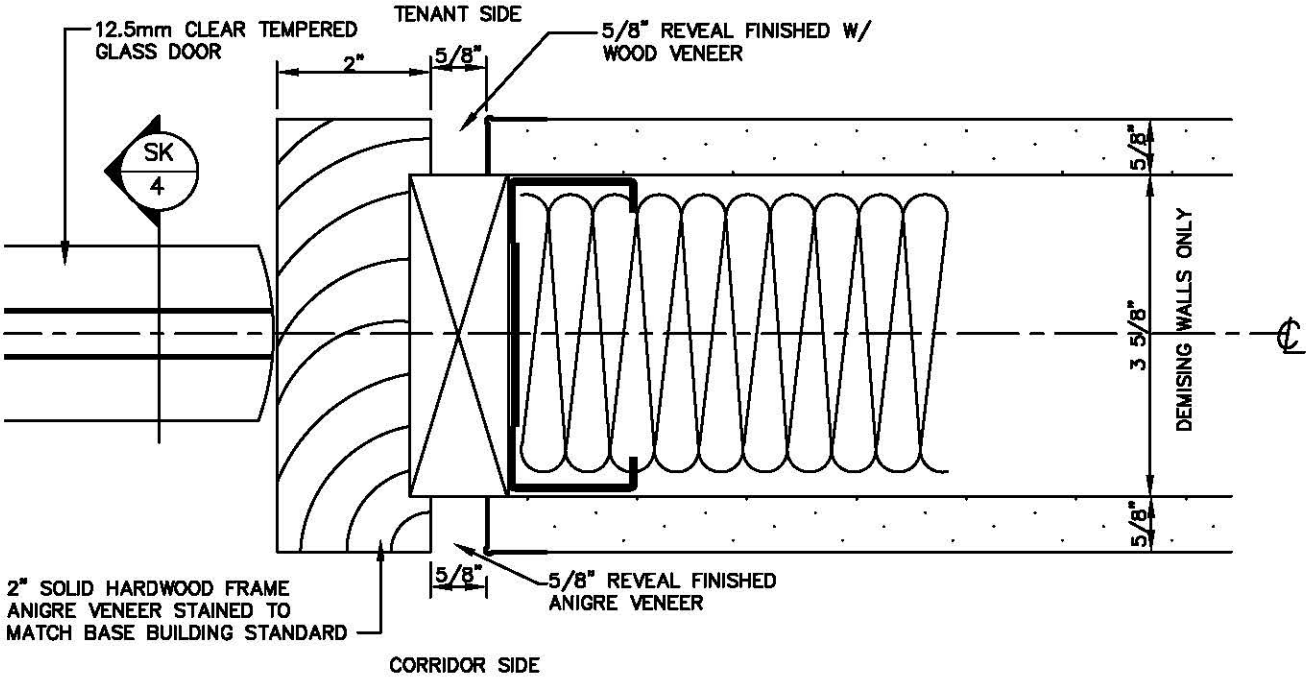

Brookfield These drawings are issued as part of landlord design criteria only. It is the tenants responsibility to apply these details in compliance with all applicable codes and regulations.	PROJECT 105 Adelaide Street West, Toronto, Ontario	PROJECT NO.: DATE: June 2011 DRAWN BY: SCALE: 1 : 2
	DRAWING TITLE SECTION : SUITE ENTRY DOOR JAMB	DWG: SK-5

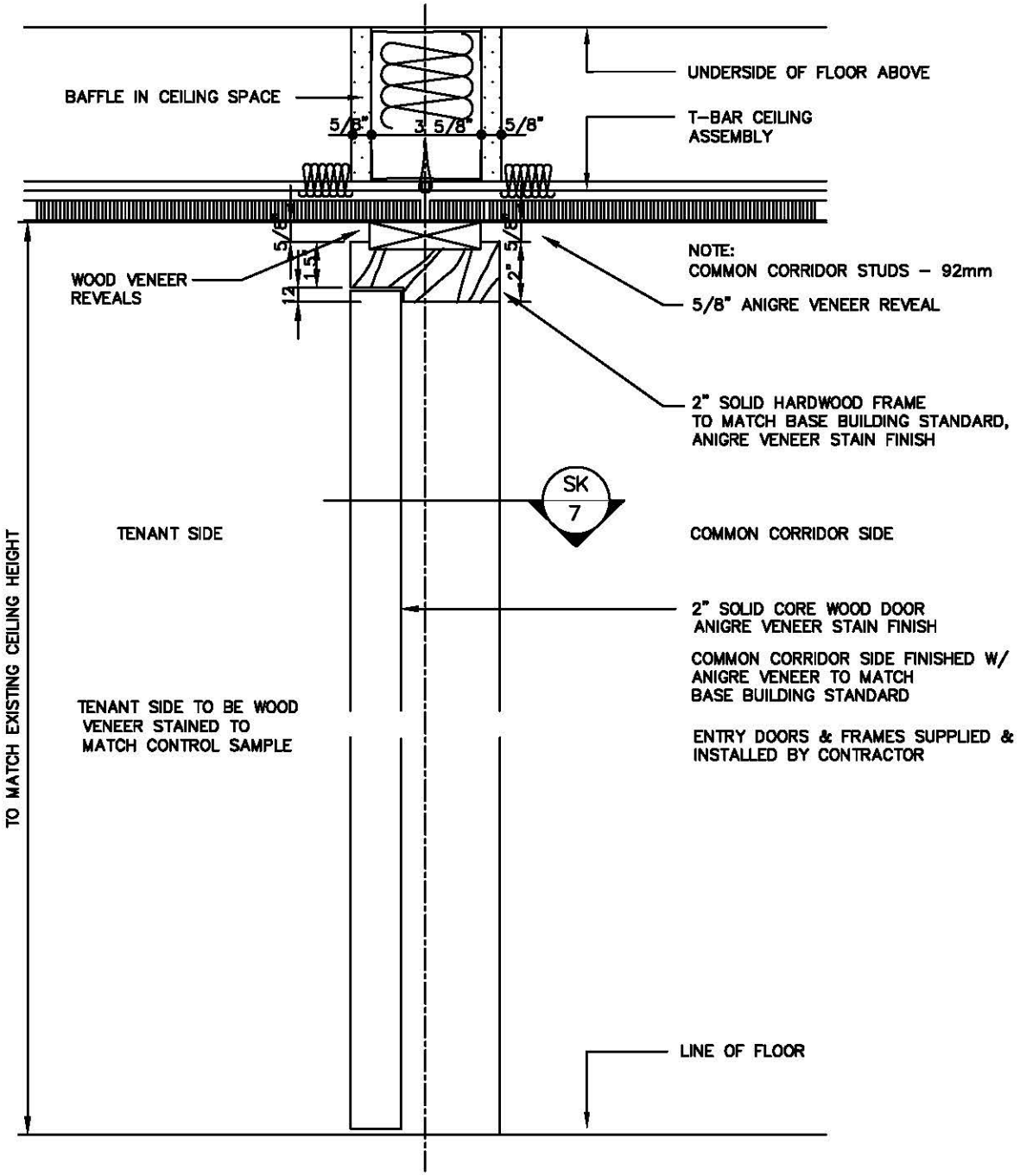

Brookfield

These drawings are issued as part of landlord design criteria only. It is the tenants responsibility to apply these details in compliance with all applicable codes and regulations.

PROJECT 105 Adelaide Street West, Toronto, Ontario	PROJECT NO.: DATE: June 2011 DRAWN BY: SCALE: 1 : 5
DRAWING TITLE SECTION : EXIT DOOR	DWG: SK-6

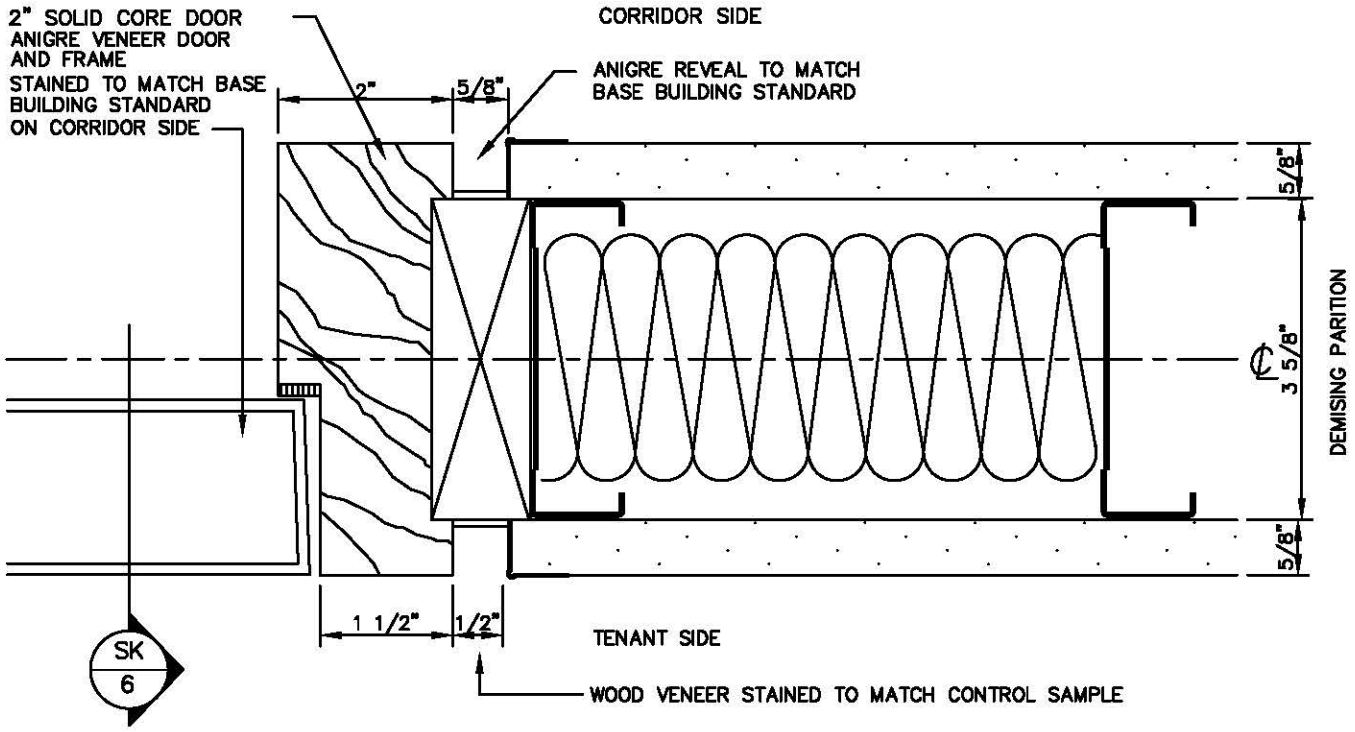

Brookfield These drawings are issued as part of landlord design criteria only. It is the tenants responsibility to apply these details in compliance with all applicable codes and regulations.	PROJECT 105 Adelaide Street West, Toronto, Ontario	PROJECT NO.: DATE: June 2011 DRAWN BY: SCALE: 1 : 2
	DRAWING TITLE SECTION : EXIT DOOR JAMB	DWG: SK-7

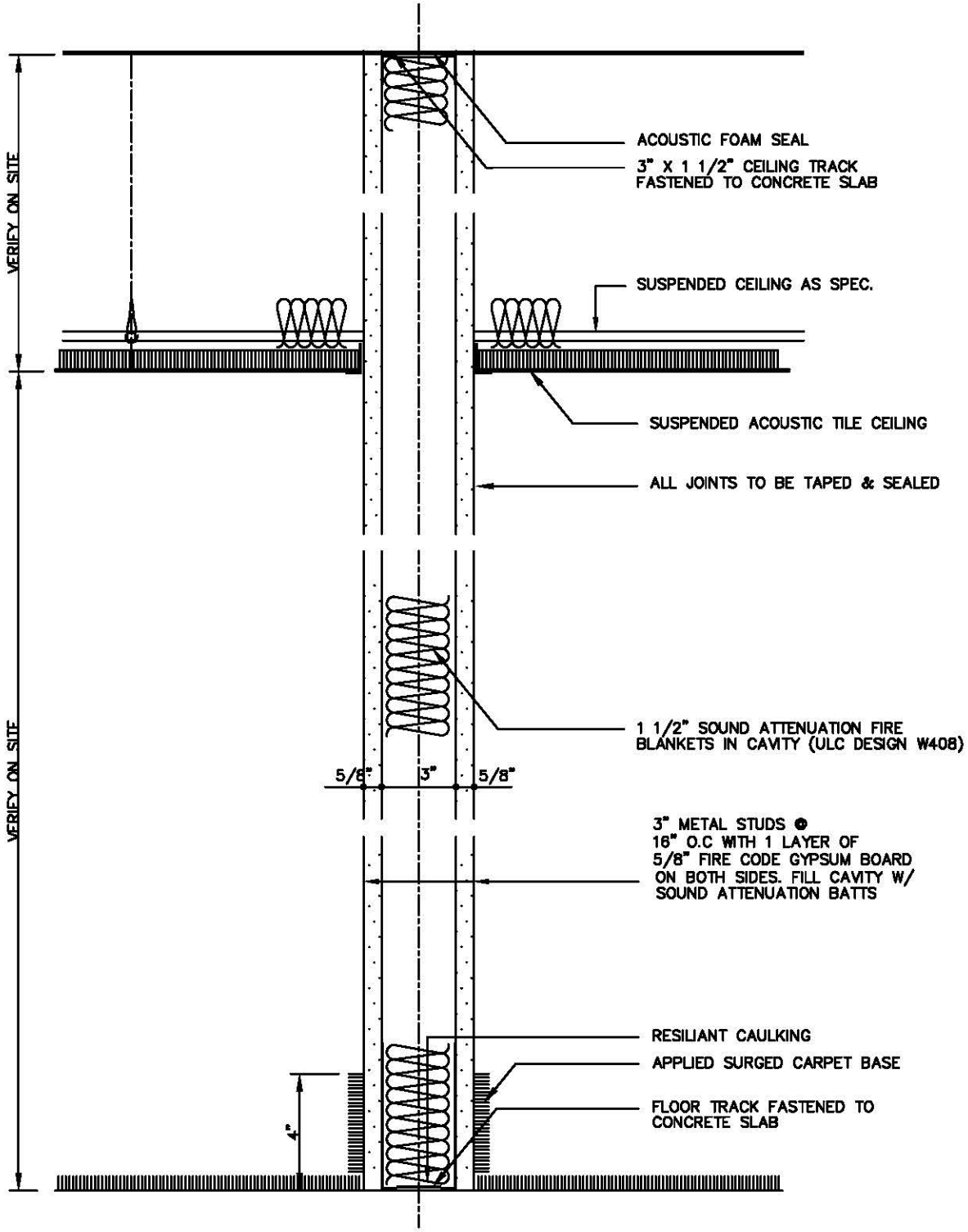

Brookfield

These drawings are issued as part of landlord design criteria only. It is the tenants responsibility to apply these details in compliance with all applicable codes and regulations.

PROJECT 105 Adelaide Street West, Toronto, Ontario	PROJECT NO.: DATE: June 2011 DRAWN BY: SCALE: 1 : 5
DRAWING TITLE SECTION : 1 HR RATED PARTITION FULL HEIGHT	DWG: SK-8

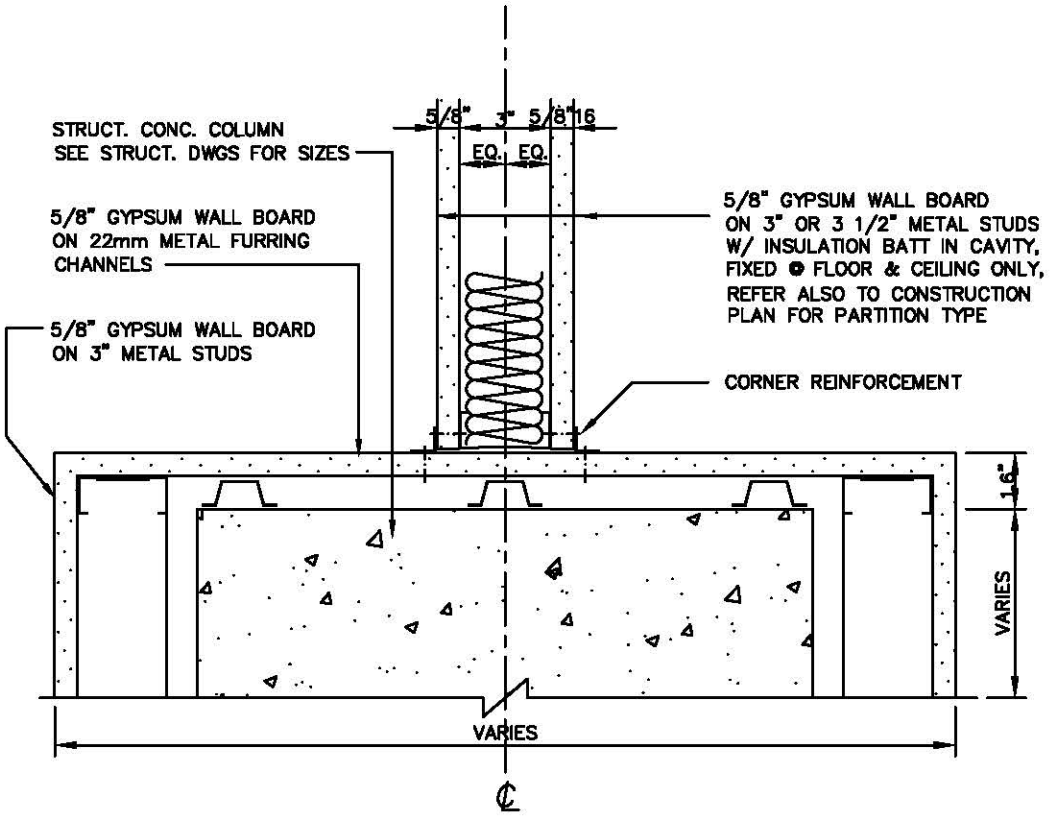

Brookfield

These drawings are issued as part of landlord design criteria only. It is the tenants responsibility to apply these details in compliance with all applicable codes and regulations.

PROJECT 105 Adelaide Street West, Toronto, Ontario	PROJECT NO.: DATE: June 2011 DRAWN BY: SCALE: 1 : 5
DRAWING TITLE SECTION : PARTITION AT EXTERIOR COLUMN	DWG: SK-9

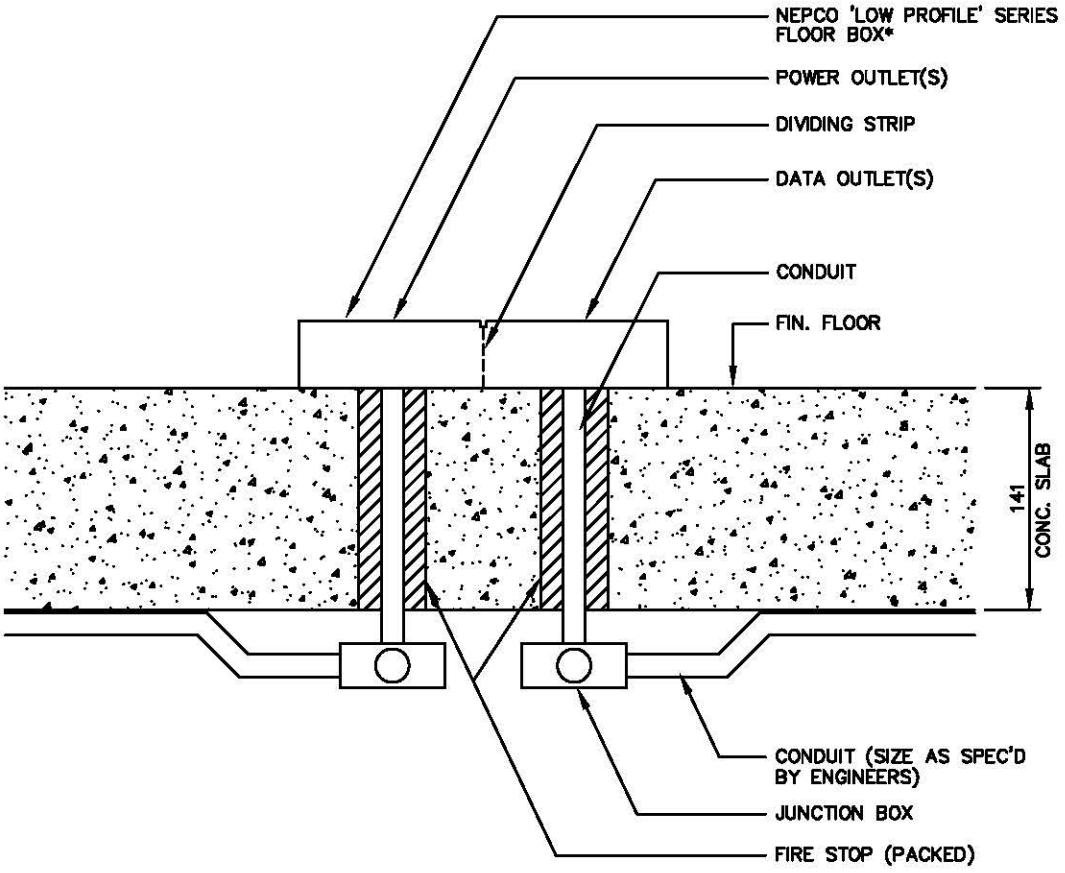

*NOTE: SMITH AND STONE 'V.L.P. SERIES AN ACCEPTABLE ALTERNATE

Brookfield These drawings are issued as part of landlord design criteria only. It is the tenants responsibility to apply these details in compliance with all applicable codes and regulations.	PROJECT 105 Adelaide Street West, Toronto, Ontario	PROJECT NO.: DATE: June 2011 DRAWN BY: SCALE: 1 : 5
	DRAWING TITLE SECTION : TYPICAL FLOOR MONUMENT	DWG: SK-10

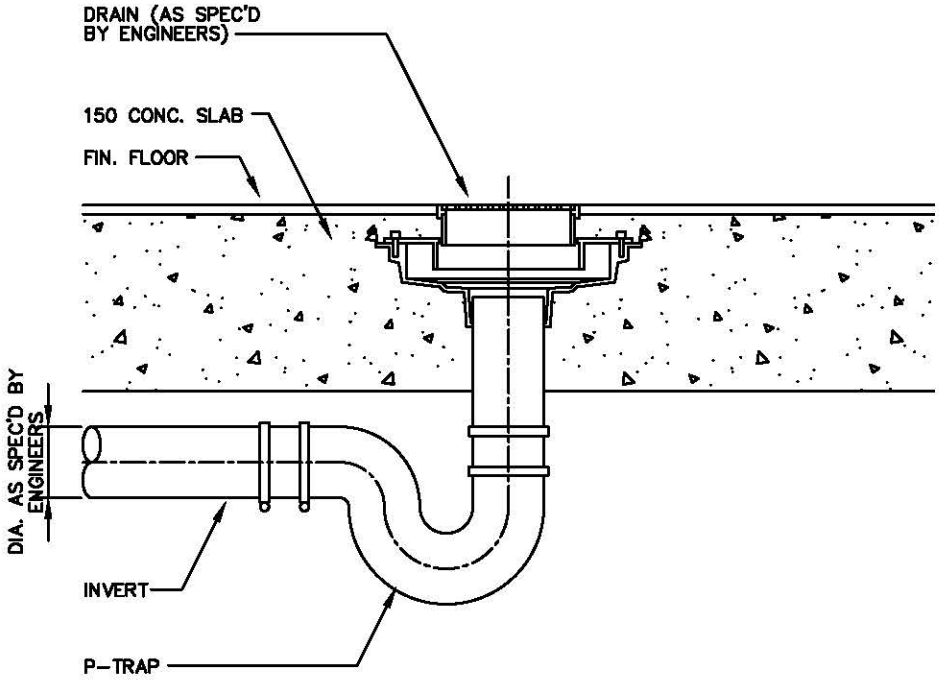

Brookfield

These drawings are issued as part of landlord design criteria only. It is the tenants responsibility to apply these details in compliance with all applicable codes and regulations.

PROJECT 105 Adelaide Street West, Toronto, Ontario	PROJECT NO.: DATE: June 2011 DRAWN BY: SCALE: N.T.S.
DRAWING TITLE SECTION : TYPICAL FLOOR DRAIN	DWG: SK-11

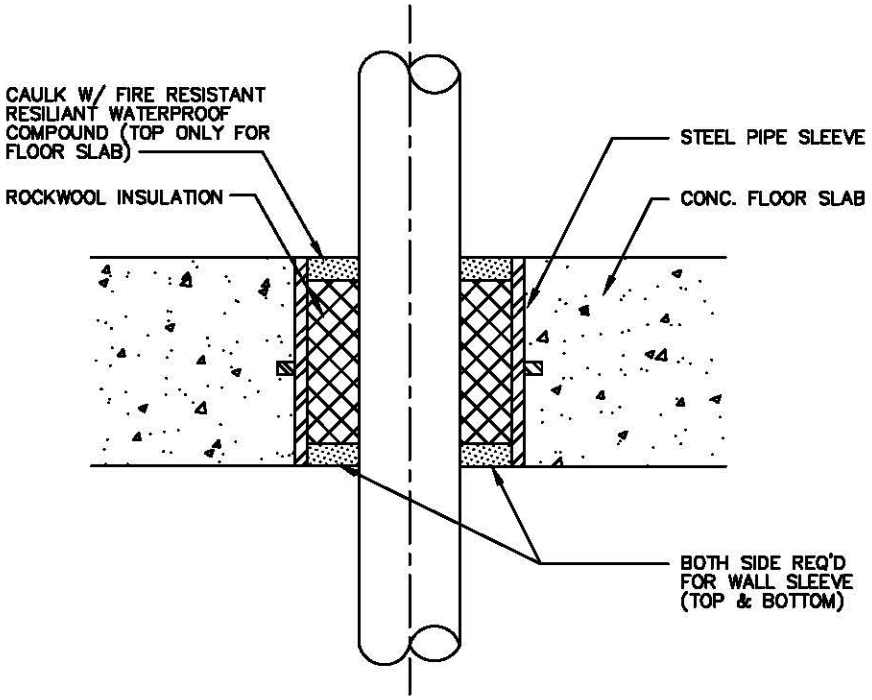

Brookfield These drawings are issued as part of landlord design criteria only. It is the tenants responsibility to apply these details in compliance with all applicable codes and regulations.	PROJECT 105 Adelaide Street West, Toronto, Ontario	PROJECT NO.: DATE: June 2011 DRAWN BY: SCALE: N.T.S.
	DRAWING TITLE SECTION : FIRE RATED SLEEVE	DWG. NO. SK-12

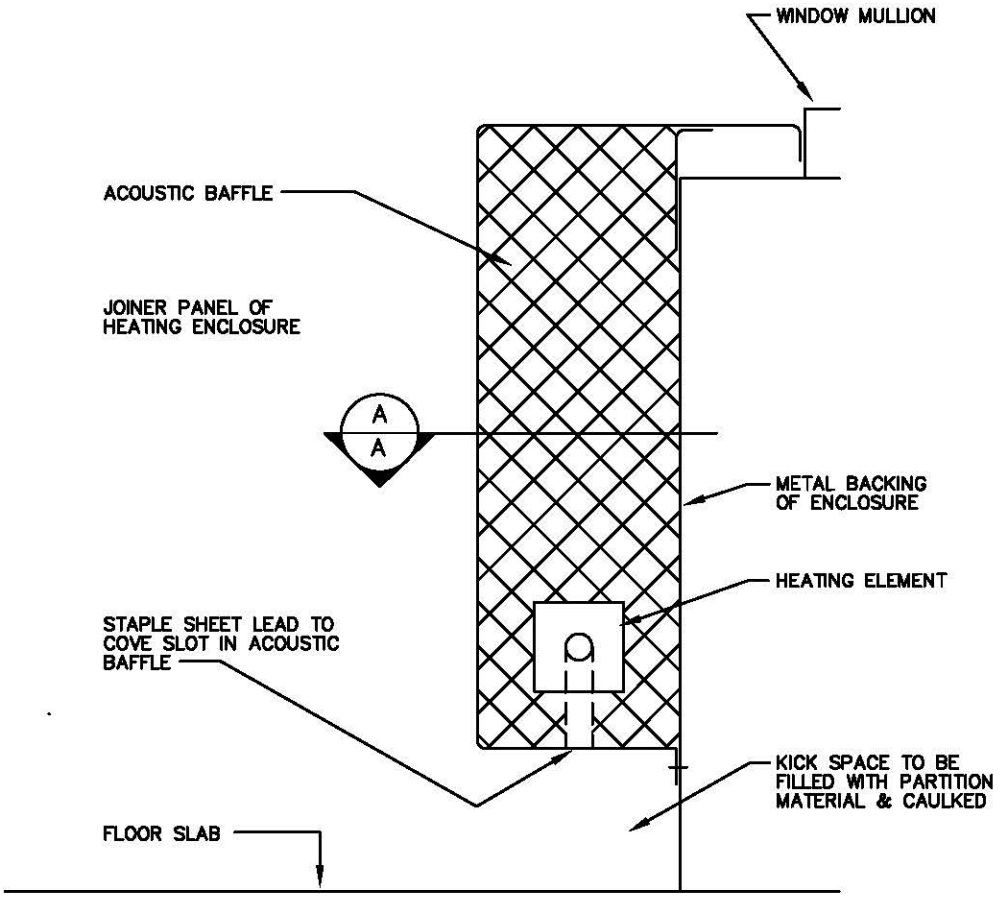

SIDE SECTION

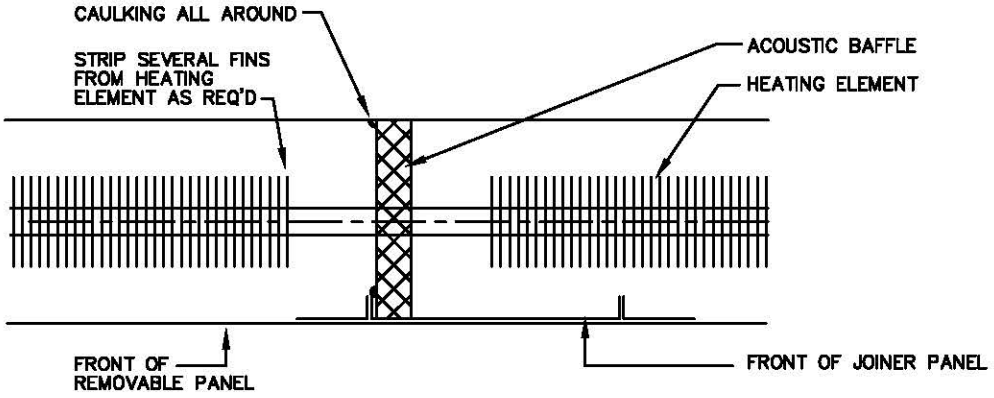

A
A
PLAN SECTION

Brookfield

These drawings are issued as part of landlord design criteria only. It is the tenants responsibility to apply these details in compliance with all applicable codes and regulations.

PROJECT 105 Adelaide Street West, Toronto, Ontario	PROJECT NO.: DATE: June 2011 DRAWN BY: SCALE: 1 : 5
DRAWING TITLE SECTION : CONVECTOR ACOUSTIC BAFFLE	DWG: SK-13

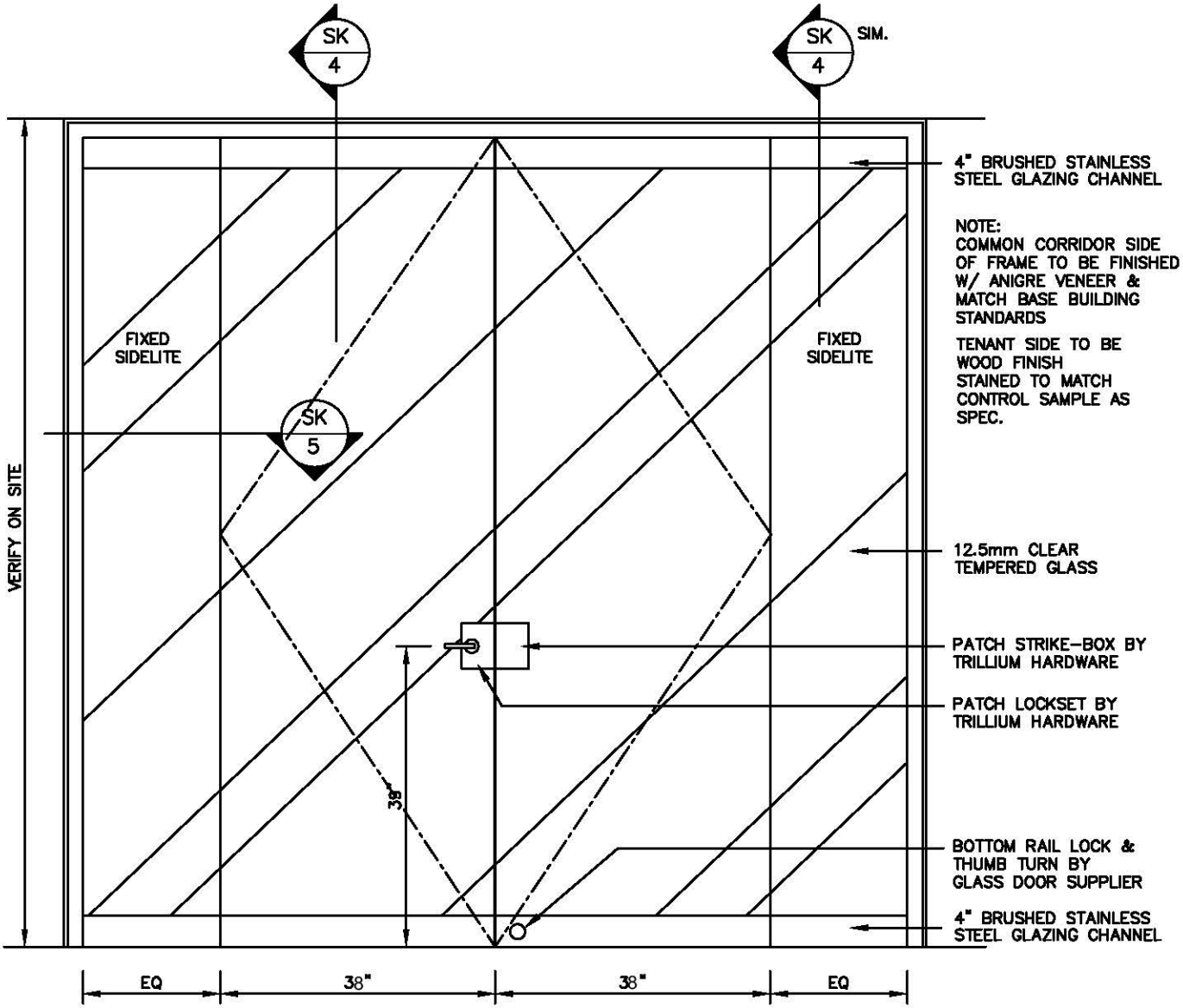

Brookfield

These drawings are issued as part of landlord design criteria only. It is the tenants responsibility to apply these details in compliance with all applicable codes and regulations.

PROJECT 105 Adelaide Street West, Toronto, Ontario	PROJECT NO.: DATE: June 2011 DRAWN BY: SCALE: 1 : 20
DRAWING TITLE ELEVATION : GLASS ENTRY DOOR OPTION 1	DWG: SK-14

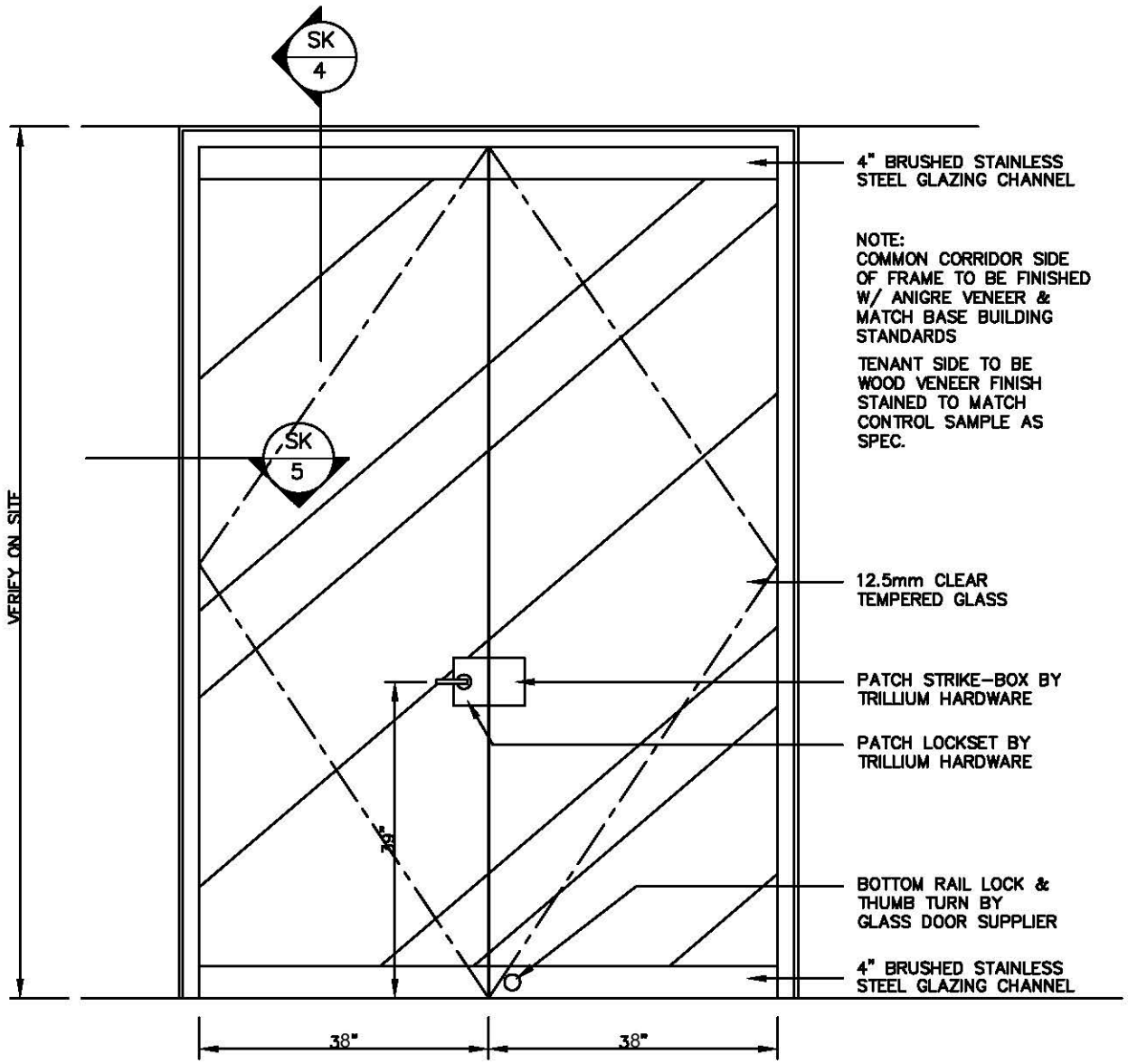

Brookfield

These drawings are issued as part of landlord design criteria only. It is the tenants responsibility to apply these details in compliance with all applicable codes and regulations.

PROJECT 105 Adelaide Street West, Toronto, Ontario	PROJECT NO.: DATE: June 2011 DRAWN BY: SCALE: 1 : 20
DRAWING TITLE ELEVATION : GLASS SUITE ENTRY DOORS OPTION 2	DWG: SK 15

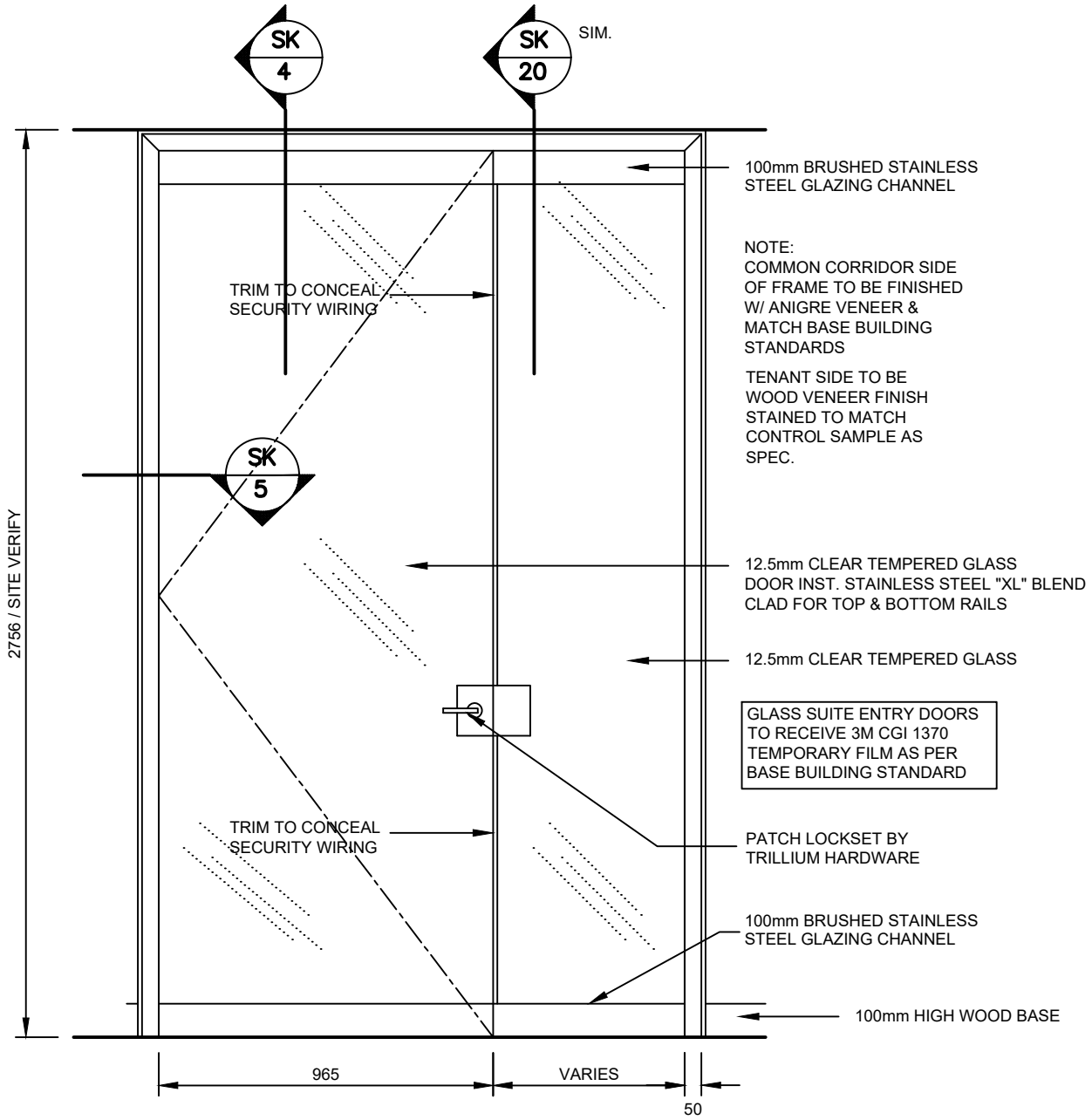

Brookfield
Properties

These drawings are issued as part of landlord design criteria only. It is the tenants responsibility to apply these details in compliance with all applicable codes and regulations.

PROJECT 105 Adelaide Street West, Toronto, Ontario	PROJECT NO.	
	DATE	APRIL 2025
	DRAWN BY	
	SCALE	1 : 20
DRAWING TITLE *ELEVATION : SINGLE GLASS DOOR*	DWG. NO. *SK*	*16*

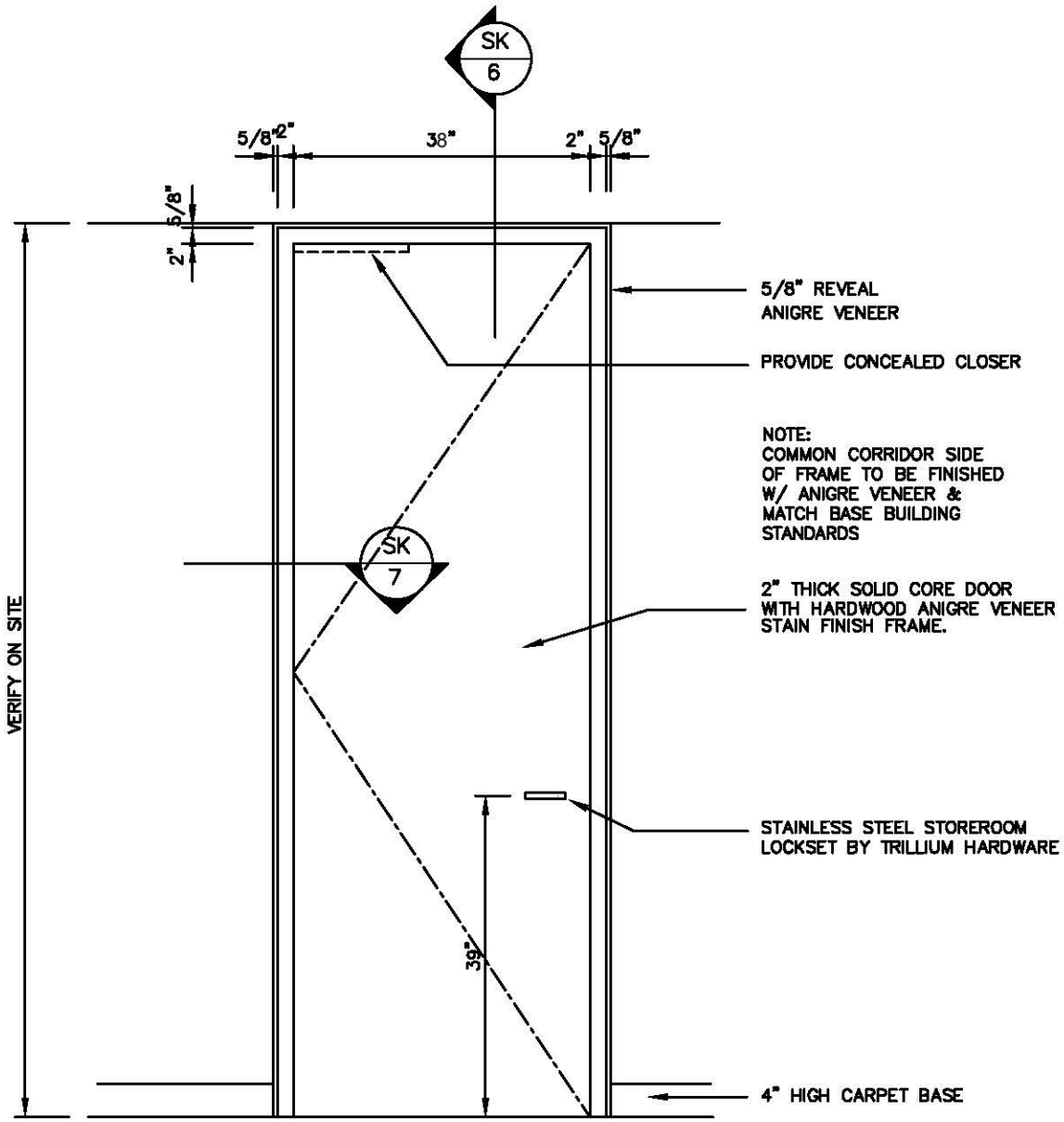

Brookfield

These drawings are issued as part of landlord design criteria only. It is the tenants responsibility to apply these details in compliance with all applicable codes and regulations.

PROJECT 105 Adelaide Street West, Toronto, Ontario	PROJECT NO.: DATE: June 2011 DRAWN BY: SCALE: 1 : 20
DRAWING TITLE ELEVATION : WOOD VENEER SINGLE DOOR	DWG: SK 17

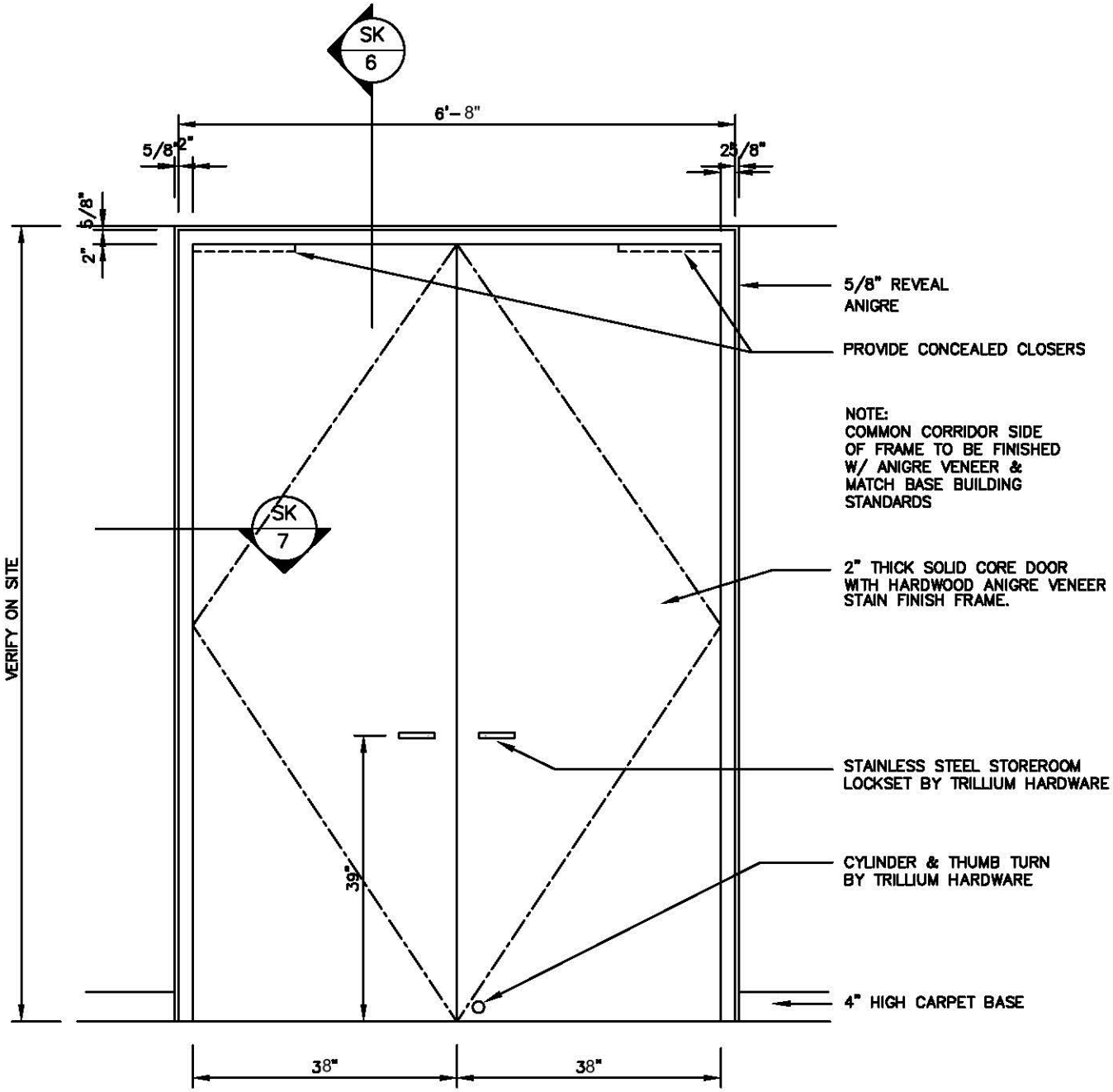

Brookfield

These drawings are issued as part of landlord design criteria only. It is the tenants responsibility to apply these details in compliance with all applicable codes and regulations.

PROJECT 105 Adelaide Street West, Toronto, Ontario	PROJECT NO.: DATE: June 2011 DRAWN BY: SCALE: 1 : 20
DRAWING TITLE ELEVATION : WOOD VENEER DOUBLE DOORS	DWG: SK 18

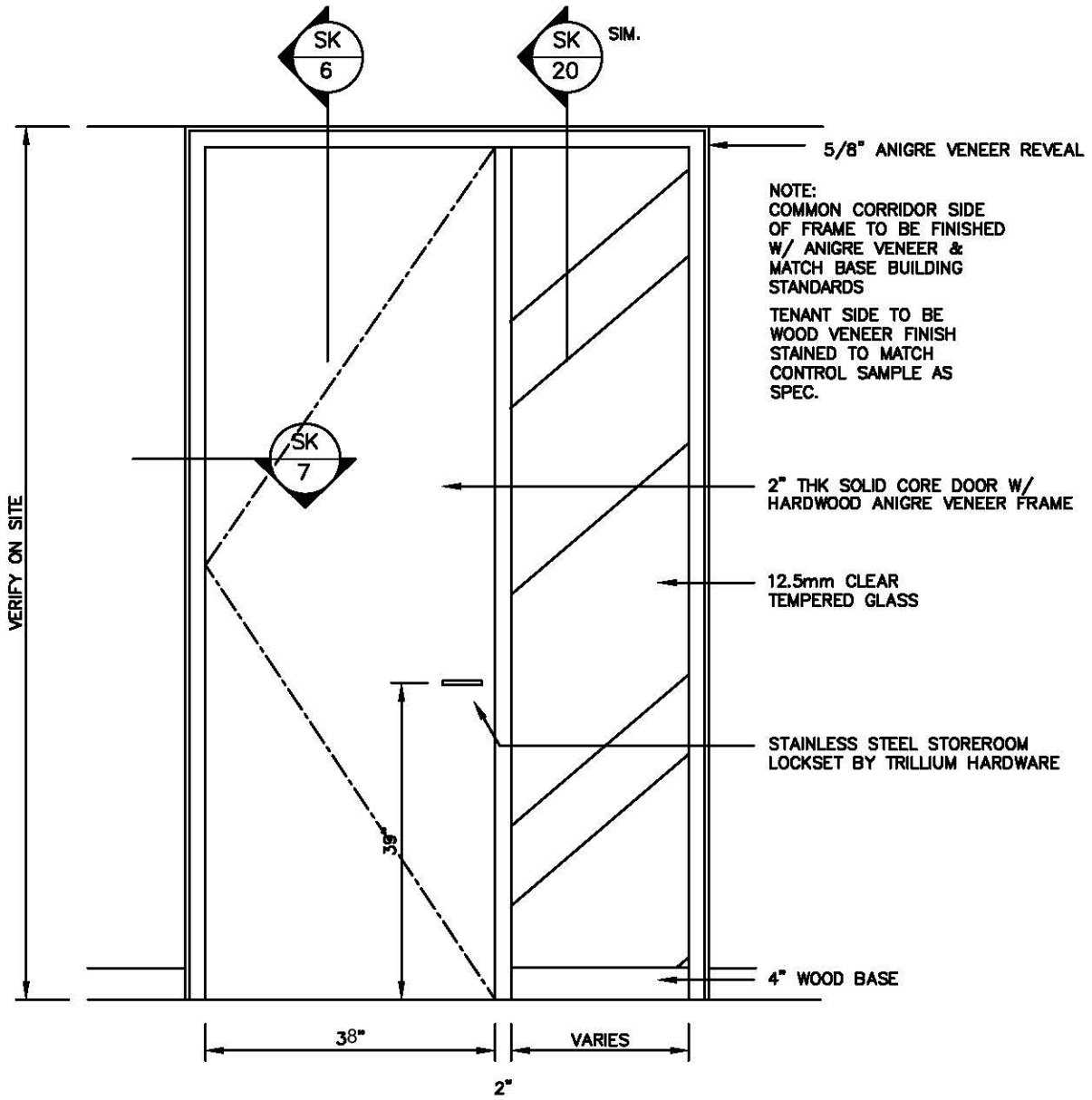

Brookfield

These drawings are issued as part of landlord design criteria only. It is the tenants responsibility to apply these details in compliance with all applicable codes and regulations.

PROJECT 105 Adelaide Street West, Toronto, Ontario	PROJECT NO.: DATE: June 2011 DRAWN BY: SCALE: 1 : 20
DRAWING TITLE ELEVATION : WOOD DOOR & SIDELITE	DWG: SK 19

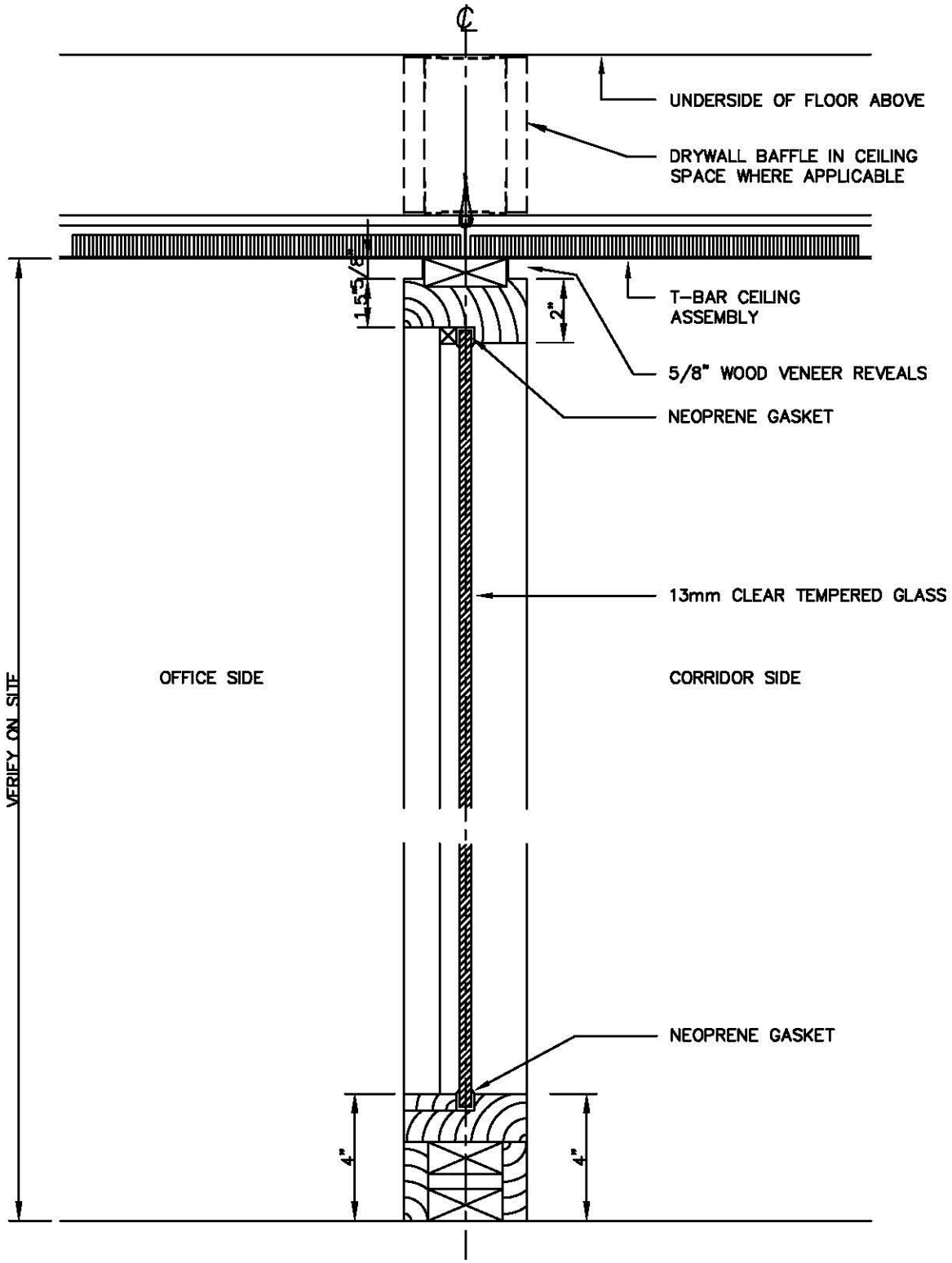

Brookfield

These drawings are issued as part of landlord design criteria only. It is the tenants responsibility to apply these details in compliance with all applicable codes and regulations.

PROJECT 105 Adelaide Street West, Toronto, Ontario	PROJECT NO.: DATE: June 2011 DRAWN BY: SCALE: 1 : 5
DRAWING TITLE SECTION : TYPICAL GLAZED PARTITION	DWG: SK-20

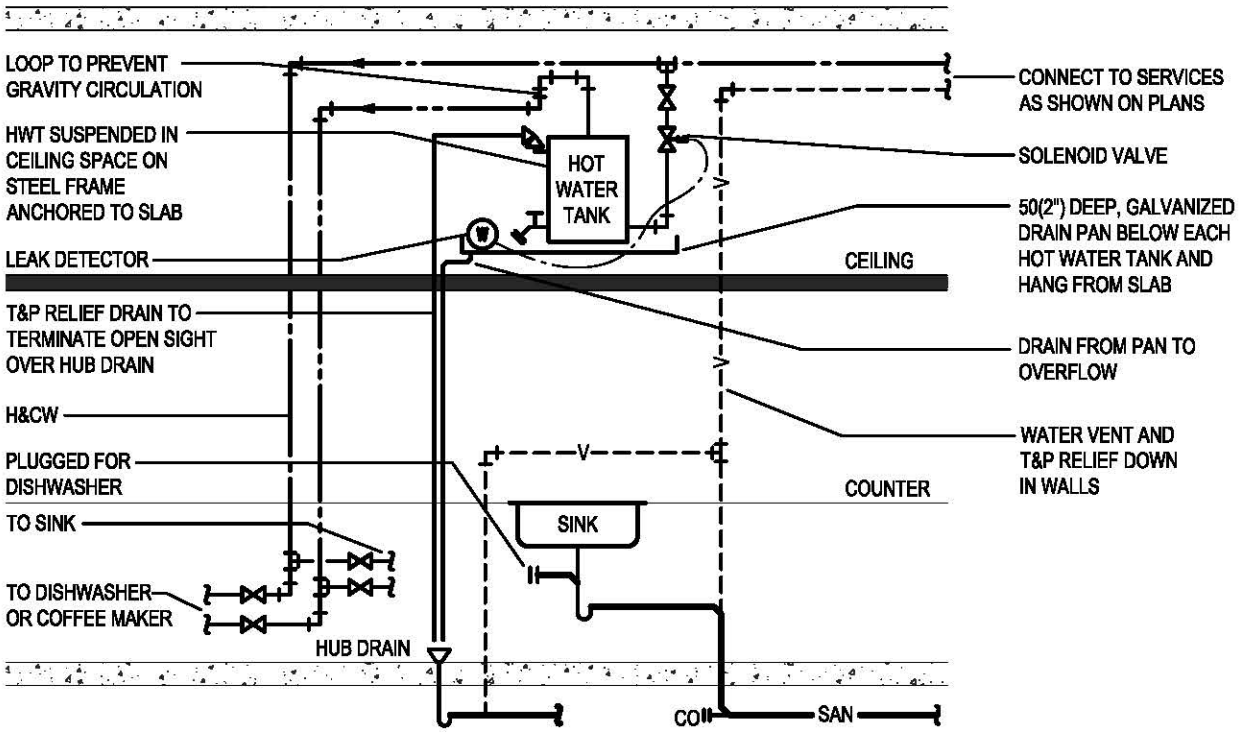

NOTES :

1. A solenoid valve (complete with isolation valve upstream for servicing) is to be located on the DCW supply to the hot water tank. There shall not be a bypass around the solenoid valve assembly. The solenoid valve shall shut off the water supply to the HWT when a leak detection sensor located within the sheet metal drip pan beneath the hot water tank detects moisture. The solenoid valve shall be normally closed, energized to open, spring return.

2. All domestic hot water tanks must have a water tight pan mounted below the supporting base of the tank. The physical dimensions of the pan must be two inches larger than the supporting base on three sides, and eight inches larger than the supporting base on the fourth side. The pan must be suspended so that the fourth side is slightly lower than the others. A water detection device shall be supplied and placed in the pan, on the fourth side, by the base building control company.

3. Pipe sizing by tenant engineer to suit design & code requirements.

Brookfield These drawings are issued as part of landlord design criteria only. It is the tenants responsibility to apply these details in compliance with all applicable codes and regulations.	PROJECT 105 Adelaide Street West, Toronto, Ontario	PROJECT NO.: DATE: June 2014 DRAWN BY: SCALE: N.T.S
	DRAWING TITLE DETAIL : HOT WATER TANK	DWG: SK-21

SECTION 10 – FORMS

TABLE OF CONTENTS

1. Electromagnetic Locking Device Form 84
2. Safe Work & Access Permit 85
3. Statutory Declaration 87
4. Contractor Reno MPAC Letter 88

Brookfield

105 ADELAIDE STREET WEST
ELECTROMAGNETIC LOCKING DEVICE FORM

BUILDING : 105 Adelaide Street West **PERMIT NUMBER :** _____

TENANT AND LOCATION INFORMATION

TENANT NAME _____ FLOOR _____ SUITE NO _____

LOCATION _____

CONTRACTOR INFORMATION

1) COMPANY NAME _____ 1) NAME OF INDIVIDUAL PERFORMING TESTING _____

2) COMPANY NAME _____ 2) NAME OF INDIVIDUAL REQUIRING ACCESS _____

COMMENTS

_____

_____

_____

TESTING RESULTS

Does The Device Release Immediately upon the following actions ?	Yes	No
1) Upon activation of the Fire Alarm System?	____	____
2) In the event of a power failure?	____	____
3) In the event of a ground fault of the high voltage supply?	____	____
4) Upon activation of a manually operated switch accessible only to authorized personnel controlling all locking devices in the building?	____	____
5) Upon release, the locking device must be reactivated manually by the activation of the manually operated switch in Item 4?	____	____
6) Is the manually activated signalling box for the fire alarm door system located on the wall within 610mm of the door?	____	____
7) Is a legible sign having the word **EMERGENCY EXIT UNLOCKED BY FIRE ALARM** permanenty mounted on the **EXIT** door with lettering at least 25mm high with a 5mm stroke?	____	____
8) Is the installation connected to a secondary power supply conforming to OBC 3.2.7. in a safe manner?	____	____
9) Is there a "Bypass Key" keyed to the building master key system?	____	____

BROOKFIELD PROPERTIES APPROVAL

APPROVED BY _____ DATE APPROVED _____

FORMS

Brookfield

105 Adelaide
Safe Work & Access Permit

BUILDING : 105 Adelaide PRIMARY ACCESS LOCATION :

TENANT INFORMATION REQUESTING ACCESS

TENANT NAME | PHONE NO. (WORK) | PHONE NO. (AFTER HOURS)

INDIVIDUAL NAME | INDIVIDUAL NAME SIGNATURE

COMPANIES AND INDIVIDUALS REQUIRING ACCESS

COMPANY NAME	NAME OF INDIVIDUAL REQUIRING ACCESS	KEYS REQ'D	CARD REQ'D

☐ See Attached List for Additional Names

WORK INFORMATION

DATES : COMMENCEMENT DATE | COMPLETION DATE

TIMES : From: To: MONDAY TO FRIDAY | From: To: SATURDAY, SUNDAY AND HOLIDAYS

DESCRIPTION OF WORK TO BE PERFORMED:

Location(s) Required Access To:

☐ Telephone Room ☐ CACF Room ☐ Roof
☐ Mechanical Room ☐ Boiler Room ☐ Other
☐ Electrical Room ☐ Chiller Room

Access To Another Tenant's Premise ☐ Yes

LOCATION | TENANT NAME | FLOOR

ELEVATOR AND LOADING DOCK REQUIREMENTS

All bookings should be placed through BSC Coordinator (availability is not guaranteed)

BOOKING INFORMATION ☐ Elevator ☐ Loading Dock ☐ Oversized Parking ☐ See Attached List

DELIVERY COMPANY | DATES REQUIRED | REQUIRED TIMES From: To:

OTHER REQUIREMENTS

REQUIRED SAFETY WORK PERMIT: ☐ Yes SECURITY REQUIRED: ☐ Yes

The completion of the Special Precaution or Protection checklists in whole or in part does not limit the worker or contractor's safety measures, control and procedures required to complete this project. Any work arising from this project must be performed in full accordance with the applicable Occupational Health and Safety Act and provincial regulations for this jurisdiction. This permit does not replace all other work permits required under legislation.

FORMS

See Reverse side

Double Sided Form

SAFE WORK PERMIT PORTION
PROJECT HAZARDS AND REQUIREMENTS

GENERAL EMERGENCY

☐ Telephones/ Emergency Numbers (Security, Medical, EH &S ☐ Emergency Route Plan/Posted
☐ Generated Waste Storage/ Removal
Comments

EQUIPMENT/ MACHINERY

☐ Elevated Work Platforms ☐ Scaffold ☐ Mechanized Equipment
☐ Extension Ladders (Non-Aluminium) ☐ Step Ladders (Non-aluminum ☐ GFCI's/ Extension Cords
☐ Other
Comments

HAZARDOUS MATERIALS/ OCCUPATIONAL EXPOSURES

☐ Solvents ☐ Flammables ☐ Toxic Substance
☐ Compressed Gases ☐ Corrosives
☐ Reactive Materials ☐ x-ray (permit required) ☐ Designated Substances
☐ Biological ☐ Radiological ☐ Other
Comments

PHYSICAL HAZARDS/ POTENTIAL ENERGY SOURCES

☐ Shutting Down Fire Protection System
☐ Roof Access (permit required) ☐ Hot Work (permit required) ☐ Fire extinguisher
☐ Excavation (permit required) ☐ Confined Space entry permit Attendant _____
☐ Rescue plan in place and reviewed
☐ Commissioning/ Live work ☐ Compressed Air
Hazardous energy: ☐ Locked Out ☐ Tagged out ☐ Proven
Exposure to: ☐ Radiation ☐ Laser ☐ Arc weld
Comments

PERSONNEL PROTECTIVE EQUIPMENT REQUIRED

☐ Protective Eyewear
☐ Fall Arrest Systems ☐ Approved Headgear ☐ Safety Footwear
☐ Hearng Protection ☐ Hearng Protection ☐ Green Patch (CSA Rating)
Comments

OCCUPANCY PROTECTION

☐ Dust Control
☐ Signage/ Barriers ☐ Pylons/ Cones ☐ Sewers and Drains Protected
Advise of location of ☐ Fencing/ Hoarding
☐ Buried ☐ Overhead Services Excavation: ☐ Hand ☐ Machine
Comments

STATEMENT OF COMPLIANCE:

Signature of Contractor Supervisor acknowledges understanding and knowledge of "Brookfield Properties Health and Safety Program", specific hazards and precautions required on this Contractors Work Permit and any other Safety Permits required. Violations can result in removal from property and Brookfield Properties approved contractor list.
regulations for this jurisdiction. This permit does not replace all other work permits required under legislation.

CONTRACTOR'S SUPERVISOR NAME (PRINT) | CONTRACTOR'S CUPERVISOR'S SIGNATURE

Safe Work Permit Reviewed By (Print name and file) | Signature

Copies to(where applicable): Contractor/Worker, Operations/Construction, Security, Tenant Services, Loading Dock

FORMS

See Reverse side

Double Sided Form

STATUTORY DECLARATION

TO BE MADE BY THE TENANT WHEN APPLYING FOR RELEASE
OF HOLDBACK, SECURITY DEPOSIT OR BOTH UPON
SUBSTANTIAL/TOTAL PERFORMANCE

IN THE MATTER OF THE LEASE

between.....

.....Tenant

and .....

Landlord

for .....

.....
(insert title of the Work and the Project)

I ..... of the ..... of .....

in the Province of ..... DO SOLEMNLY DECLARE :

THAT I am.....(See Note 1) of.....the Tenant named in the Lease above-mentioned, and as such have personal knowledge of the facts hereunder declared, and that all accounts for labour, subcontracts, products, construction machinery and equipment and other indebtedness which may have been incurred by the Tenant in the Performance of the Work (See Note 2) and for which the Landlord might in any way be held responsible have been paid in full except holdback monies properly retained.

AND I MAKE THIS SOLEMN DECLARATION conscientiously believing it to be true and knowing it is of the same force and effect as if made under oath.

DECLARED before me at the offices of .....

..... in the

city of ..... in the

regional municipality of ..... Signed .....

this day of 20

.....
A Commissioner for Oaths, Notary Public, Justice of the Peace

NOTE 1: The Declaration must be made by the President, a Vice President, the Secretary, the Treasurer, or a Director of an incorporated company except that another individual may make the Declaration provided that two copies of the by-law issued under the Corporate seal authorizing such individual to execute documents accompanies the first Declaration on each Contract. For a partnership the Declaration must be made by one of the partners and for a sole proprietorship the sole proprietor himself must make the Declaration. The position of the declarant and the name of the Tenant must be clearly noted.

NOTE 2: Other indebtedness shall mean only such debts incurred by Tenant to persons in Privity of contract with him.

FORM-0172;Rev:2

[TO BE PLACED ON COMPANY LETTERHEAD]

PLEASE NOTE:
1. **Review (and revise if need be) the project information and dates**
2. **Execute and return a PDF copy of the signed letter to our attention with current date**
3. **Provide copies of the Building Permit Cards for the unit (if there were any)**

[Current Date]

Abbi Grace
Vice President, Asset Management
Brookfield Property Partners
181 Bay St, Suite 700, Toronto, ON, M5J 2T3

Dear Ms. Grace:

RE: Renovation at 105 Adelaide Street West - Roll #19 04 063 020 006 00

Please accept this letter as confirmation of the renovation for the units listed below:

Unit #	Description	Area (Sq.ft.)	From (dd-mm-yy)	To (dd-mm-yy)
0000	th Flr Office	0	dd-mm-yy	dd-mm-yy

Should you require further information regarding this matter, please do not hesitate to contact the undersigned.

Yours truly,

SIGNATURE:
NAME:
TITLE:
COMPANY NAME:

PHONE #:
E-MAIL:

SECTION 11 – MANUAL REVISIONS

ISSUE	DATE	DESCRIPTION	REVISED BY
1			
2	Aug 8/11	formatting	GH/SP
3	Mar 14/12	Minor revisions to Sections 7, 8 and 9 and 10 Updated general provisions (100.3)	GH/SP
4	Nov 1/12	Updated general provisions (100.5), Form 3 and Section 7.1	GH/SP
5	Jan 28/13	Section 7.3	GH/SP
6	Jun 20.13	Updated general provisions (100.6)	GH/SP
7	Nov 25/13	Property Manager Name Name of Building Section 4.4 Section 7.1 Section 7.1 Section 7.2 Section 7.3	GH/CM
8.	Dec5/13	Section 7.3	GH/CM
9.	Feb26.14	Section 7.1 Section 7.3 Section 8.1(A)	GH/CM
10	Jun30/14	Section 7.3 Section 9	GH/CM
11	Oct24.14	Section 7.2	GH/CM
12	Feb13.15	Section 7.1	GH/MA
13	Apr 20.15	Section 7.1	MO/MA
14	Sep 16.15	Section 7.1	MA (Amalg.)
15	Oct 6.15	Section 7.1	MO/MA
16	Feb 3.16	Section 7.2	MO/MA
17	Feb 16.16	Section 9 – sketches	MO/MA
18	Apr 20.16	Section 7.3	MO/MA
	Jun 10/16	General Provisions (100.8)	MO/MA
19	May 5/17	Section 7.1	MO/MA
20	Jun 21/17	Section 7.1	MO/MA
21	Apr 24/18	Section 7.1	MO/MA
22	Jan 14/19	Section 7.1	MO/MA
23	Oct 23/19	Section 7.1 and Section 8.1(A)	MO/MA
24	Feb 5/21	Section 7.1 and 7.2 General Provisions (100.9)	RB/MA
25	Jun 30/21	Sections 7.1 and 7.3 and General Provisions (100.10)	RB/MA
26	Jul 8/21	Section 7.1	RB/MA
27	Mar 10/22	Section 7.1	RB/MA
28	Mar 11/22	Section 7.3	RB/MA
29	Jun 21/22	Amended Cover	RB/MA
30	Jun 28/22	Section 7.1	RB/MA
31	Aug 2/22	Section 7.2	RB/MA
32	Aug 11/22	Section 7.1	RB/MA
33	Jan 12/23	Section 7.1	RB/MA
34	Jan 24/23	Section 7.1	RB/MA
35	Jun 26/23	Section 7.1, New Cover and New Forms	PF/MA

ISSUE	DATE	DESCRIPTION	REVISED BY
36	Feb 26/24	Section 10 – Forms	PF/MA
37	May 28/24	Section 7.1 and Section 10 – Forms	MA
38	Oct 25/24	Section 8.1(A)	EP/MA
39	Jan 28/25	Section 7.1	JE/MA
40	Feb 18/25	Section 7.3	JE/MA
41	Apr 10/25	Sections 7.1, 7.2, 7.3 and new General Section	AL/MA
42	Jul 31/25	Section 7.1	JE/MA
43	Oct 27/25	Section 7.1	JE/MA
44	Feb 27/26	Section 7.3	WW/MA
45	Mar 11/26	Section 7.1	JE/MA